SILVER VASE 440/2016
GRAN TURISMO 440/2016

Ed. 07-2016 - Rev. 02

SILVER VASE

GRAN TURISMO

Catalogo ricambi
Spare parts catalog
Catalogue pieces de rechange
Ersatzteilkatalog
Catalogo piezas de repuestos

INFORMAZIONI GENERALI
Il presente catalogo serve per richiedere con esattezza le parti di ricambio
Nelle ordinazioni indicare:
1) il numero di codice dei particolari seguito dalla descrizione;
2) il colore per i pezzi verniciati o comunque colorati;
3) il numero di matricola del motociclo, stampigliato sul cannotto di sterzo.
Le indicazioni destra e sinistra si riferiscono ai lati del veicolo rispetto al senso di marcia;

GENERAL INFORMATION
The present spare parts list enables one to order exactly the right spare parts.
When ordering specify:
1) the part's code number followed by its description;
2) indicate colour for painted or couloured parts;
3) the motorcycle's serial number, stamped on the steering head.
References to right and left apply to the vehicle in terms of its direction of movement.

INFORMATIONS GENERALES
Ca catalogue permet de commander correctement les pièces de rechange.
Les commandes doivent être passées en indiquant:
1) le numéro de code des pièces détachées suivi de leur description;
2) le couleur des pièces peintes ou coulorés;
3) le matricule de la moto, estampillé sur la tige du guidon.
Droite et gauche sont les côtés du véhicule par rapport au sens de la marche.

ALLGEMEINE HINWEISE
Dieser Ersatzteilkatalog dient zur genauen Angabe der Teile bei Ersatzteilbestellungen.
Bei Ersatzbestellung ist folgendes anzugeben:
1) Die Bestellnummer der Ersatzteile mit der entsprechenden Beschreibung;
2) Farbe für lackierte und farbige Teile angeben;
3) Die Sseriennummer des Motorrads, die am Lenkrohr eingeprägt ist.
Die Angaben rechts und links beziehen sich auf das Fahrzeug in Fahrrichtung.

INFORMACIONES GENERALES
El presente catálogo sirve para pedir con exactitud las partes de recambio.
En los pedidos se debe indicar:
1) el número de código de la parte y a continuación la descripción;
2) el color para las piezas barnizadas o coloreadas;
3) el número de matrícula de la motocicleta, estampado en le tubo de dirección.
Las indicaciones derecha e izquierda se refieren a los lados del vehículo respecto del sentido de marcha.

Dati indicativi soggetti a modifiche senza impegno di preavviso.
All data are subject to modification without prior notice.
Données indicatif sujet au modifications sans obligation de préavis.
Anderungen Vorbehalten.
Datos indicativos sujetos a modificaciones sin compromiso de preaviso.

NOTE - LIST - NOTES - NOTE - NOTAS:

AUS : Australia, Australia, Australie, Australien, Australia
CDN : Canada, Canada, Canada, Kanada, Canadá
IT : Italia, Italy, Italie, Italien, Italia
JAP : Giappone, Japan, Japon, Japan, Japón
USA : Stati Uniti d'America, United States of America, Etats Units d'Amerique, Vereinigte Staaten von Amerika, Estados Unidos

N° DI MATRICOLA INIZIALE - INITIAL SERIAL NUMBER - MATRICULE INITIAL - BEGINNTESERIENNUMMER - MATRICULA INICIAL	
MODELLO - MODEL MODELE - MODELL MODELO	MATRICOLA - SERIAL NUMBER MATRICULE - SERIENNUMMER MATRICULA
SILVER VASE 440	ZN0A300AAGV000001
GRAN TURISMO 440	XXXXXXXXXXXXX

INDICE – INDEX – INDEX – INHALTSVERZEICHNIS - INDICE

SILVER VASE 440
GRAN TURISMO 440

Tavola Drawing Table Bild Tabla	Denominazione	Description	Designation	Bezelchnung	Denominacion	Pagina Page Page Seite Paja
1	ATTREZZI DI ASSISTENZA,	SERVICE TOOLS, MANUALS	OUTILS D'ASSISTANCE, MANUELS	HILFAUSRUSTUNG, HANDBUCH	HERRAMIENTAS DE ASISTENCIA,	
	MANUALI E DOTAZIONI	AND EQUIPMENT	ET EQUIPEMENT	UND DOTIERUNG	MANUALES Y EQUIPAMIENTO	13
2	CILINDRO, PISTONE	CYLINDER, PISTON	CYLINDRE, PISTON	ZYLINDER, KOLBEN	CILINDRO, PISTON	15
3	TESTA CILINDRO	CYLINDER HEAD	CULASSE	ZYLINDERKOPF	CULATA	17
4	COPERCHIO VALVOLE	VALVE COVER	COUVERCLE CULASSE	ZYLINDERKOPFDECKEL	TAPA CULATA	19
5	MANOVELLISMO	CRANKSHAFT	VILEBREQUIN	KURBELWELLE	CIGÜEÑAL	21
6	DISTRIBUZIONE	VALVE TIMING	DISTRIBUTION	VENTILSTEUERUNG	DISTRIBUCION	23
7	LUBRIFICAZIONE	OIL PUMP	PUMPE HUILE	MOTORSCHMIERUNG	LUBRICACION	25
8	COPERCHIO CARTER SINISTRO	LEFT CRANKCASE COVER	COUVERCLES CARTER GAUCHE	GEHAUSEDECKEL LINKS	TAPAS BANCADA IZQUIERDA	27
9	SEMICARTER SINISTRO	LEFT HALF CRANKCASE	CARTER GAUCHE	GEHAUSEDECKEL LINKS	BANCADA IZQUIERDA	29
10	SEMICARTER DESTRO	RIGHT HALF CRANKCASE	CARTER DROIT	GEHAUSEDECKEL RECHTS	BANCADA DERECHO	31
11	FRIZIONE	CLUTCH	EMBRAYAGE	KUPPLUNG	EMBRAGUE	33
12	COMANDO CAMBIO	GEARSHIFT MECHANISM	COMMANDE DE VITESSE	GANGSCHALTUNG	MANDO CAMBIO	35
13	TRASMISSIONE PRIMARIA	PRIMARY DRIVE	TRANSMISSION PRIMAIRE	PRIMÄRÜBERSETZUNG	TRANSMISION PRIMARIA	37
14	PARTE ELETTRICA	IGNITION SISTEM	PARTIES ELECTRIQUE	ELEKTRISCHE TEILE	PARTE ELECTRICA	39
15	CORPO FARFALLATO	THROTTLE BODY	CORP PAPILLON	DROSSELKLAPPENKÖRPER	CUERPO OSCILANTE	41
16	FILTRO ARIA	AIR FILTER	FILTRE AIRE	LUFTFILTER	FILTRO DE AIRE	43
17	IMPIANTO RAFFREDAMENTO OLIO	OIL COOLING SYSTEM	INSTALLATION RAFROIDISSEMENT HUILE	ÖL SCHMIERUNGSSYSTEM	EQUIPO DE ENFRIAMENTO ACEITE	45
18	SERBATOIO CARBURANTE	FUEL TANK	RESERVOIR CARBURANT	KRAFTSTOFFBEHALTER	DEPOSITO GASOLINA	47
19	PANNELLI, PARAFANGHI, SELLA	PANEL, FENDERS, SEAT	PANNEAU, GARDE-BOUES, SIEGE	STREIFEN, KOTFLUGEL, SATTEL	PANELO, GUARDABARROS, SILLIN	49
20	TELAIO, PEDANE	FRAME, FOOT RESTS	CADRE, REPOSE PIEDS	RAHMEN, FUSSBRETT	BASTIDOR, REPOSAPIES	53
21	MANUBRIO E COMANDI	HANDLEBAR AND CONTROLS	GUIDON ET COMMANDES	LENKER UND STEUERORGANE	MANILLAR Y MANDOS	57
22	SOSPENSIONE ANTERIORE	FRONT FORK ASSEMBLY	SUSPENSION AVANT	VORDERTELESKOPGABEL	SUSPENSION DELANTERA	59
23	FORCELLONE E AMMORTIZZATORE	REAR SWING ARM AND	FOURCHE AT SUSPENSION ARRIERE	HINTERHAUFHANGUNG	HORQUILLA YSUSPENSION TRASERA	
	POSTERIORE	SUSPENSION				61
24	RUOTA ANTERIORE	FRONT WHEEL	ROUE AVANT	VORTERRAD	RUEDA DELANTERA	63
25	RUOTA POSTERIORE	REAR WHEEL	ROUE ARRIERE	HINTERRAD	RUEDA TRASERA	65
26	FRENO IDRAULICO ANTERIORE	FRONT HYDRAULIC BRAKE	FREIN HYDRAULIQUE AVANT	VORDERBREMSE	FRENO HIDRAULICO DELANTERO	67
27	FRENO IDRAULICO POSTERIORE	REAR HYDRAULIC BRAKE	FREIN HYDRAULIQUE ARRIERE	HINTERBREMSE	FRENO HIDRAULICO TRASERO	69
28	SCARICO (SILVER VASE)	EXHAUST SYSTEM (SILVER VASE)	TUYAU D'ECHAPPEMENT (SILVER VASE)	AUSPUFFROHR (SILVER VASE)	TUBO DE ESCAPE (SILVER VASE)	71
28A	SCARICO (GRAN TURISMO)	EXHAUST SYSTEM (GRAN TURISMO)	TUYAU D'ECHAPPEMENT (GRAN TURISMO)	AUSPUFFROHR (GRAN TURISMO)	TUBO DE ESCAPE (GRAN TURISMO)	73
29	STRUMENTO DIGITALE	DIGITAL INSTRUMENT	INSTRUMENT DIGITAL	DIGITAL TACHOMETER	INSTRUMENTO DIGITAL	75
30	GRUPPO CAVI, PARTI ELETTRICHE	MAIN WIRING HARNESS	CABLES PRINCIPAL, PARTIES ELECTR.	KABEL, ELEKTRISCHE KOMPONENTE	GRUPO CABLES, PARTES ELECTRICAS	77

INDICE – INDEX – INDEX – INHALTSVERZEICHNIS - INDICE

Tavola Drawing Table Bild Tabla	Denominazione	Description	Designation	Bezelchnung	Denominacion	Pagina Page Page Seite Paja
31	DECALCOMANIE (SILVER VASE)	TRANSFER (SILVER VASE)	DECALCOMANIE (SILVER VASE)	ABZIEHBILD (SILVER VASE)	CALCOMANIA (SILVER VASE)	81
31A	DECALCOMANIE (GRAN TURISMO)	TRANSFER (GRAN TURISMO)	DECALCOMANIE (GRAN TURISMO)	ABZIEHBILD (GRAN TURISMO)	CALCOMANIA (GRAN TURISMO)	83

INDICE – INDEX – INDEX – INHALTSVERZEICHNIS - INDICE

Tavola - Drawing - Table - Bild - Tabla 1

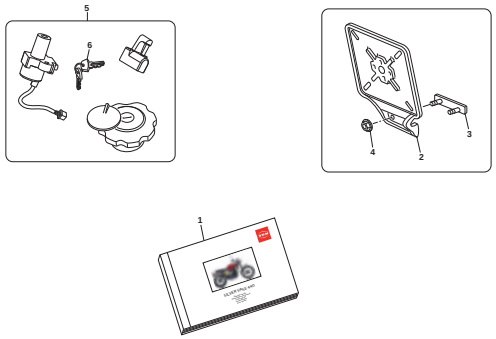

Pagina - Page - Page - Seite - Paja 12

Tavola - Drawing - Table - Bild - Tabla 2

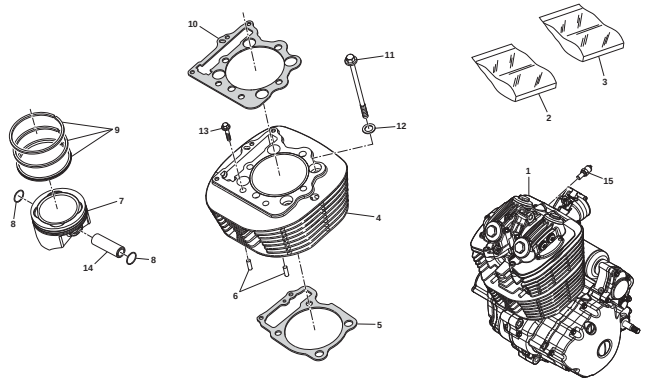

Pagina - Page - Page - Seite - Paja 14

Tavola - Drawing - Table - Bild - Tabla 3

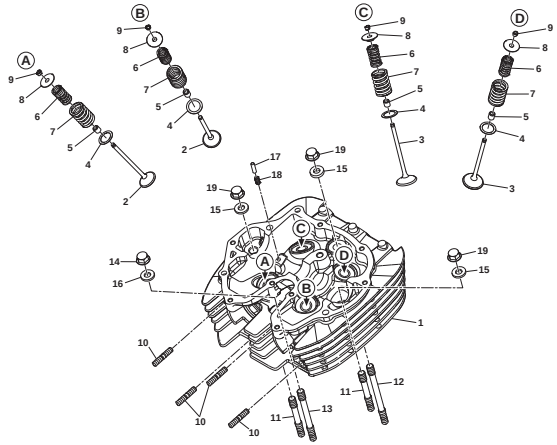

Pagina - Page - Page - Seite - Paja 16

Tavola - Drawing - Table - Bild - Tabla 4

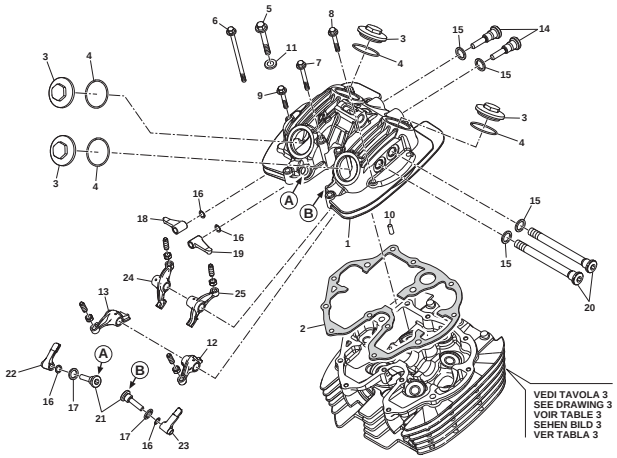

Pagina - Page - Page - Seite - Paja 18

Tavola - Drawing - Table - Bild - Tabla 5

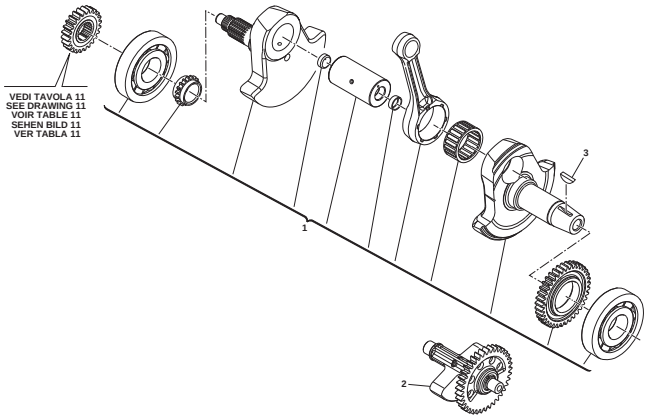

Pagina - Page - Page - Seite - Paja 20

Tavola - Drawing - Table - Bild - Tabla 6

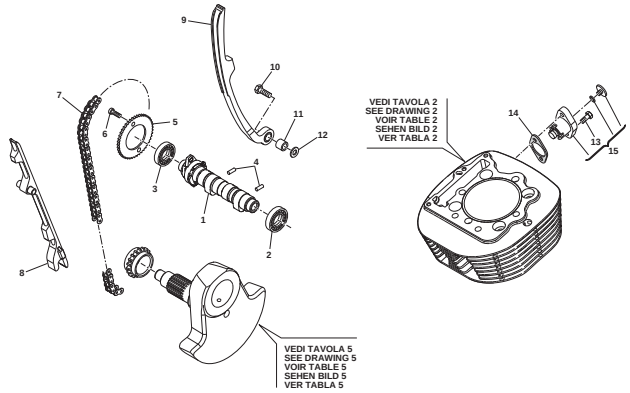

Pagina - Page - Page - Seite - Paja 22

Tavola - Drawing - Table - Bild - Tabla 7

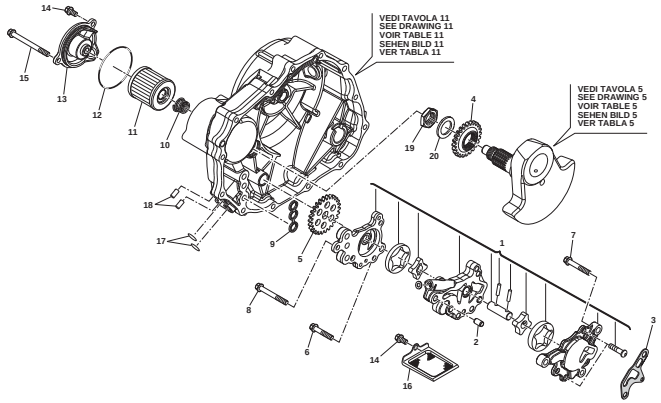

Pagina - Page - Page - Seite - Paja 24

Tavola - Drawing - Table - Bild - Tabla 8

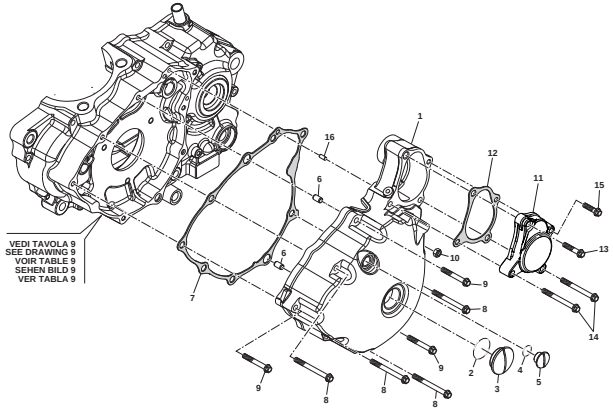

Pagina - Page - Page - Seite - Paja 26

Tavola - Drawing - Table - Bild - Tabla 9

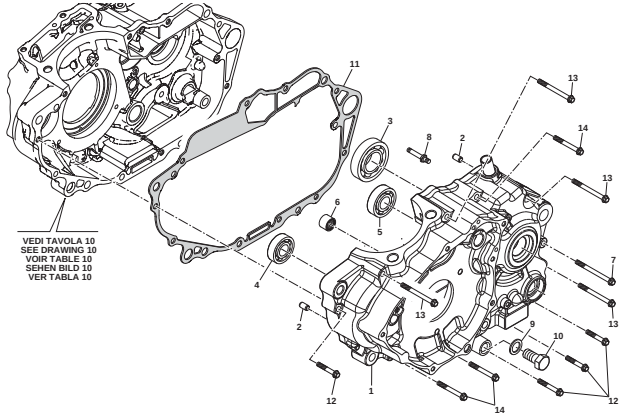

Pagina - Page - Page - Seite - Paja 28

Tavola - Drawing - Table - Bild - Tabla 10

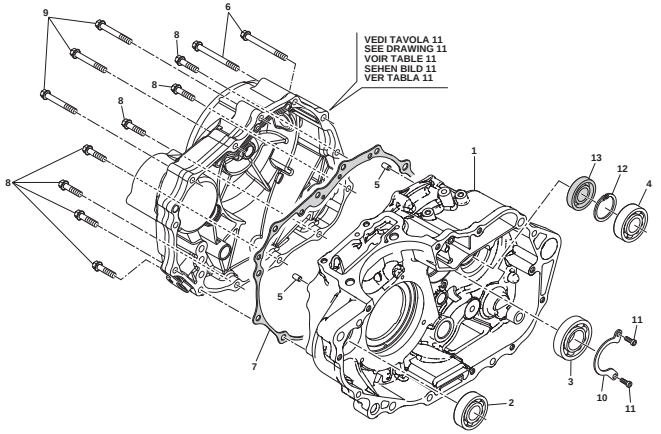

Pagina - Page - Page - Seite - Paja 30

Tavola - Drawing - Table - Bild - Tabla 11

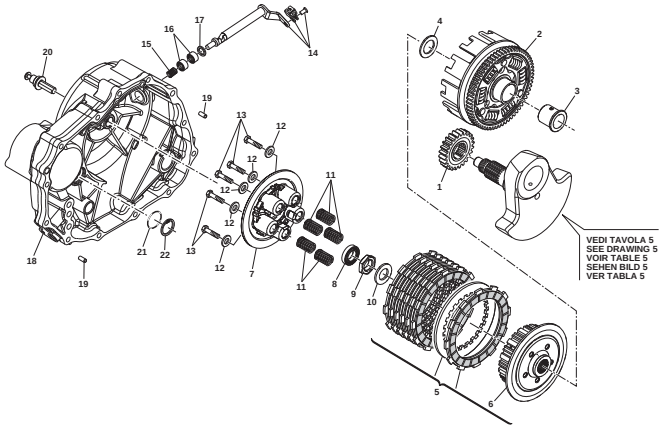

Pagina - Page - Page - Seite - Paja 32

Tavola - Drawing - Table - Bild - Tabla 12

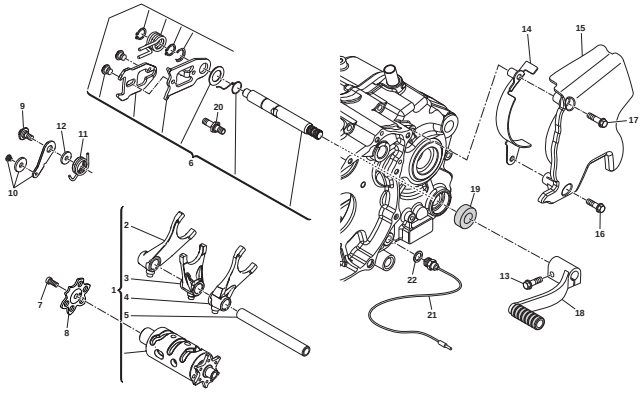

Pagina - Page - Page - Seite - Paja 34

Tavola - Drawing - Table - Bild - Tabla 13

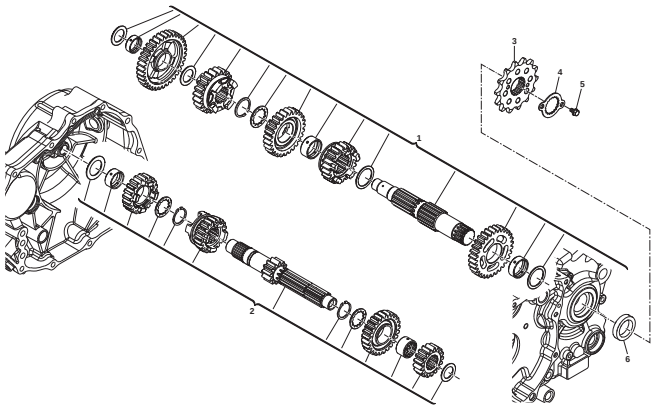

Pagina - Page - Page - Seite - Paja 36

Tavola - Drawing - Table - Bild - Tabla 14

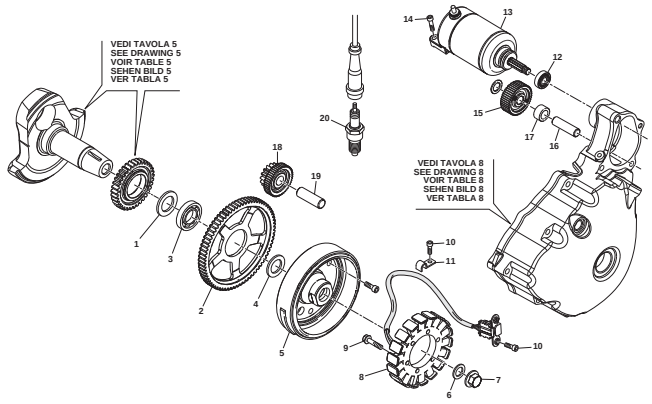

Pagina - Page - Page - Seite - Paja 38

Tavola - Drawing - Table - Bild - Tabla 15

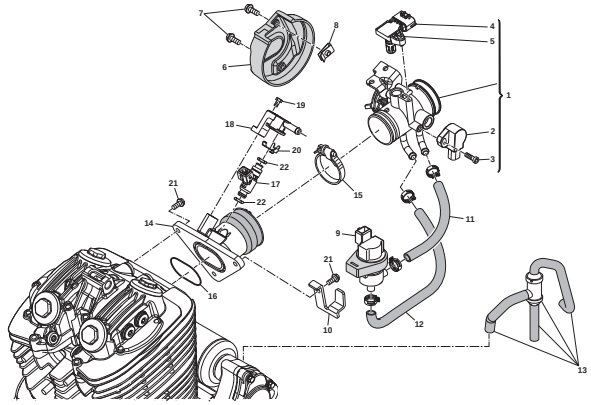

Pagina - Page - Page - Seite - Paja 40

Tavola - Drawing - Table - Bild - Tabla 16

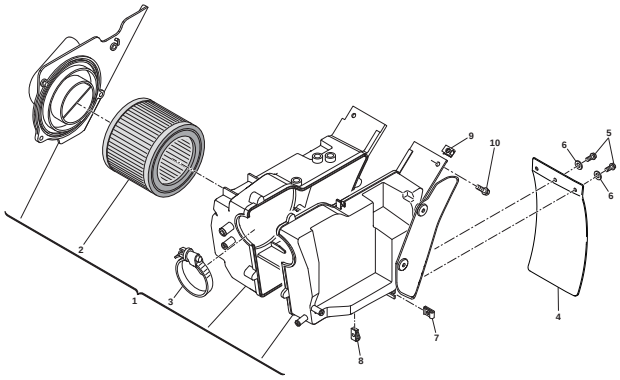

Pagina - Page - Page - Seite - Paja 42

Tavola - Drawing - Table - Bild - Tabla 17

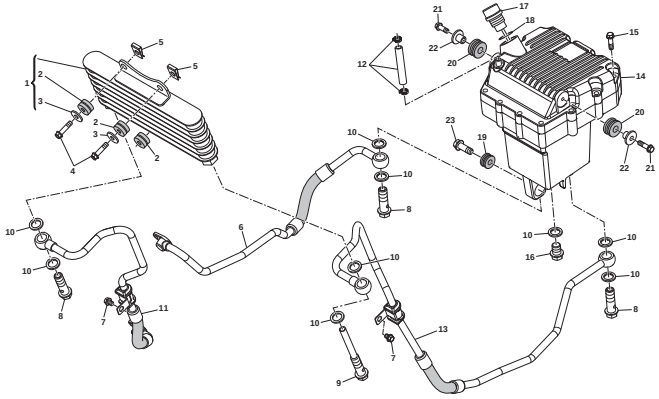

Pagina - Page - Page - Seite - Paja 44

Tavola - Drawing - Table - Bild - Tabla 18

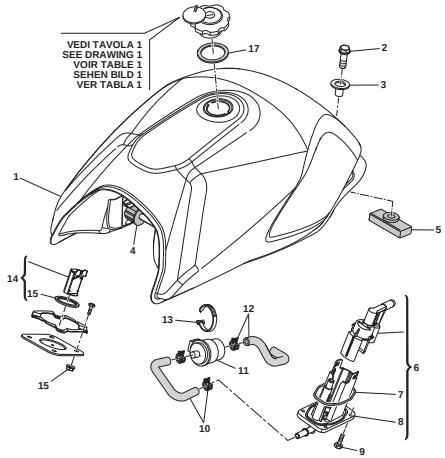

Pagina - Page - Page - Seite - Paja 46

Tavola - Drawing - Table - Bild - Tabla **19**

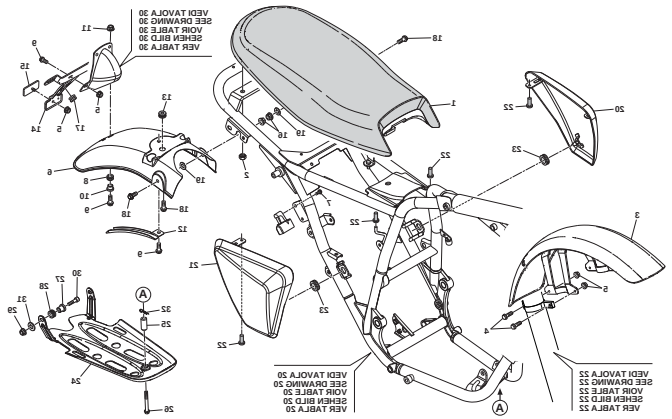

Pagina - Page - Page - Seite - Paja **48**

Tavola - Drawing - Table - Bild - Tabla **20**

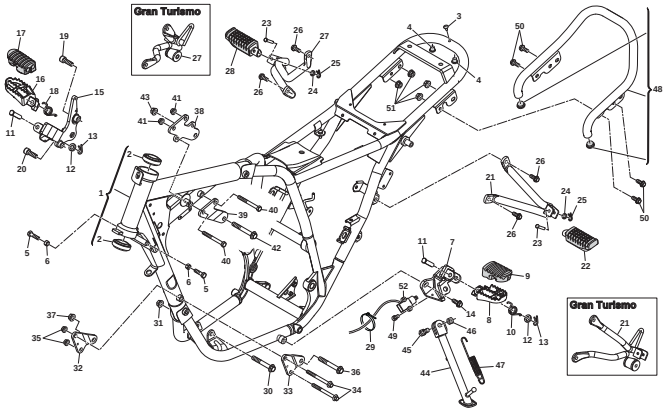

Pagina - Page - Page - Seite - Paja **52**

Tavola - Drawing - Table - Bild - Tabla **21**

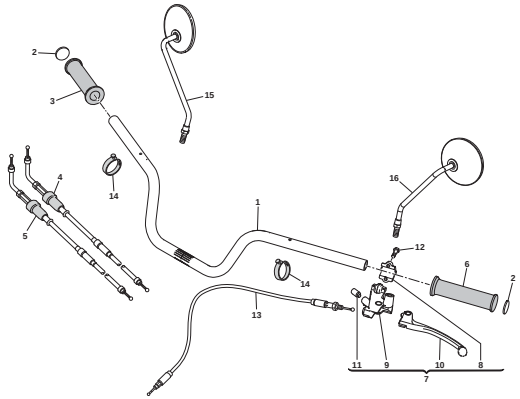

Pagina - Page - Page - Seite - Paja **56**

Tavola - Drawing - Table - Bild - Tabla **22**

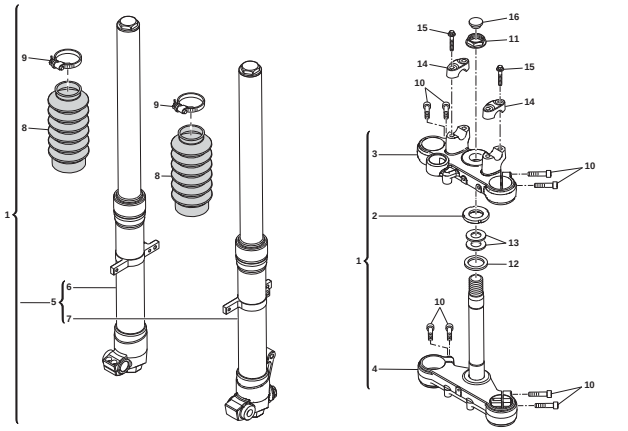

Pagina - Page - Page - Seite - Paja **58**

Tavola - Drawing - Table - Bild - Tabla **23**

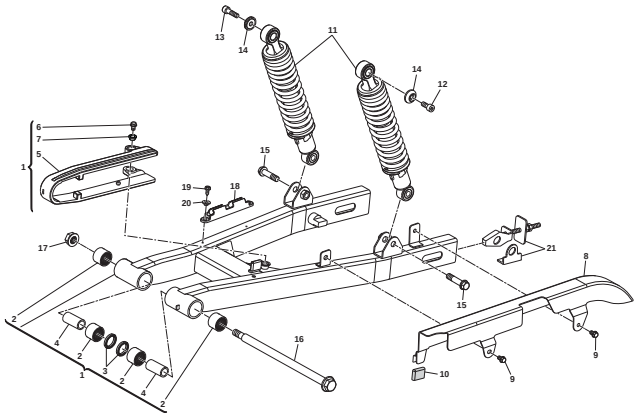

Pagina - Page - Page - Seite - Paja **60**

Tavola - Drawing - Table - Bild - Tabla **24**

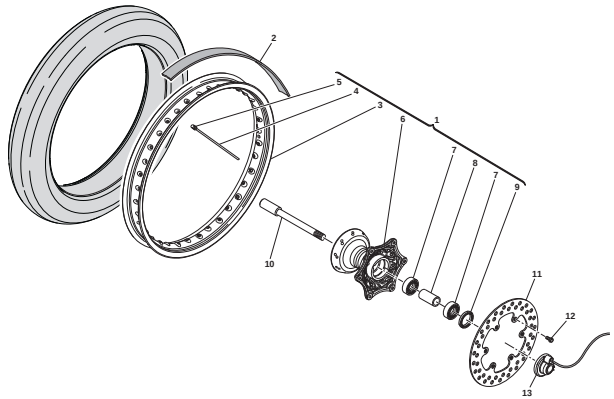

Pagina - Page - Page - Seite - Paja **62**

Tavola - Drawing - Table - Bild - Tabla **25**

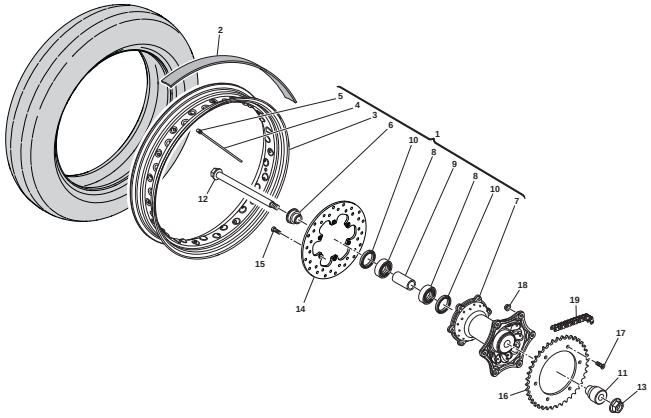

Pagina - Page - Page - Seite - Paja 64

Tavola - Drawing - Table - Bild - Tabla **26**

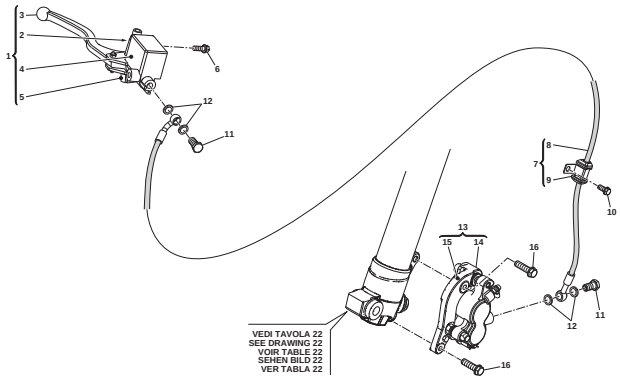

Pagina - Page - Page - Seite - Paja 66

Tavola - Drawing - Table - Bild - Tabla **27**

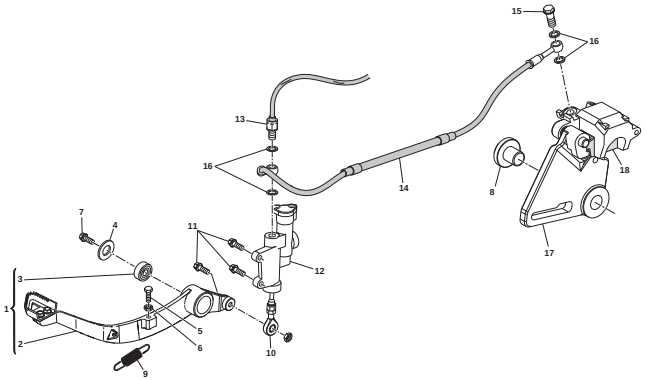

Pagina - Page - Page - Seite - Paja 68

Tavola - Drawing - Table - Bild - Tabla **28**

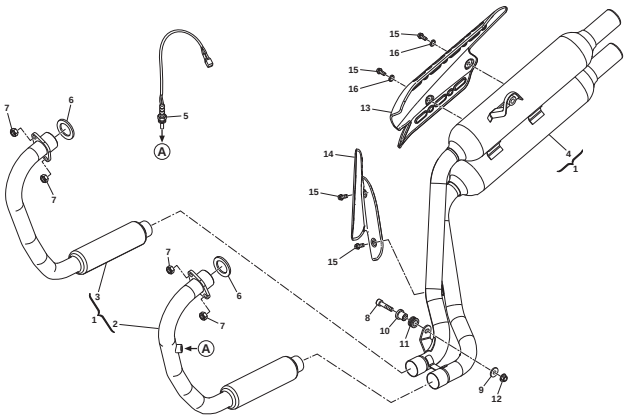

Pagina - Page - Page - Seite - Paja 70

Tavola - Drawing - Table - Bild - Tabla **28A**

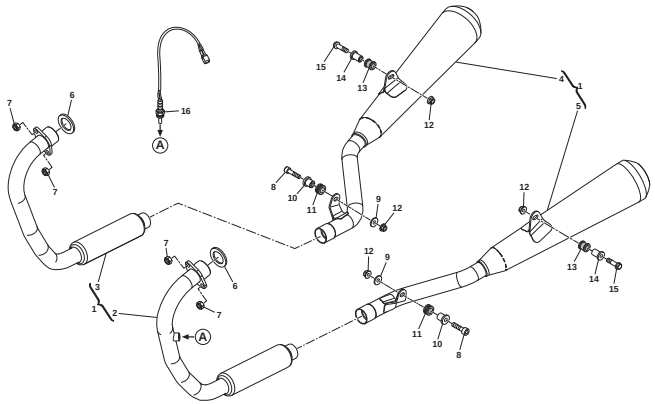

Pagina - Page - Page - Seite - Paja 72

Tavola - Drawing - Table - Bild - Tabla **29**

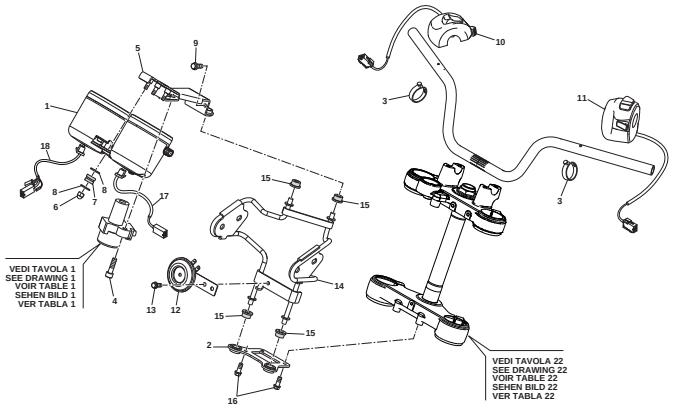

Pagina - Page - Page - Seite - Paja 74

Tavola - Drawing - Table - Bild - Tabla 30

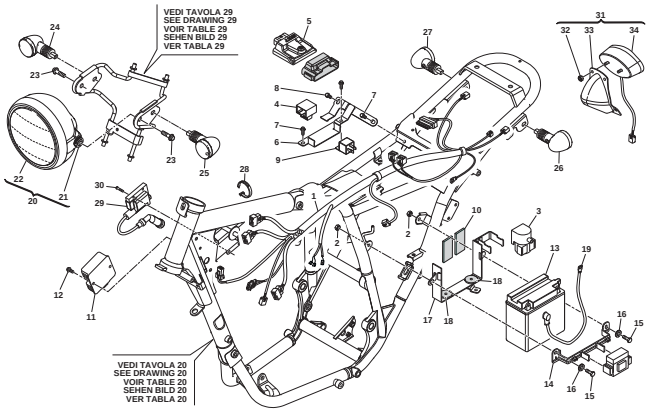

Pagina - Page - Page - Seite - Paja 76

Tavola - Drawing - Table - Bild - Tabla 31

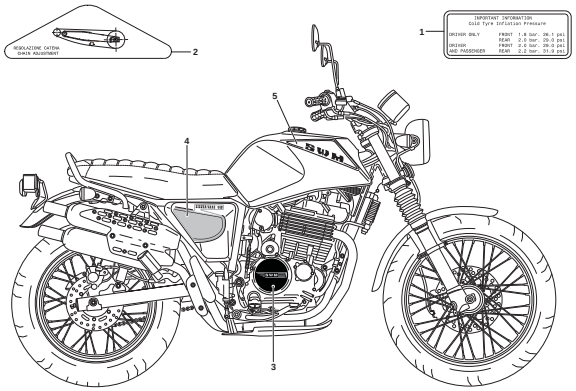

Pagina - Page - Page - Seite - Paja 80

Tavola - Drawing - Table - Bild - Tabla 31A

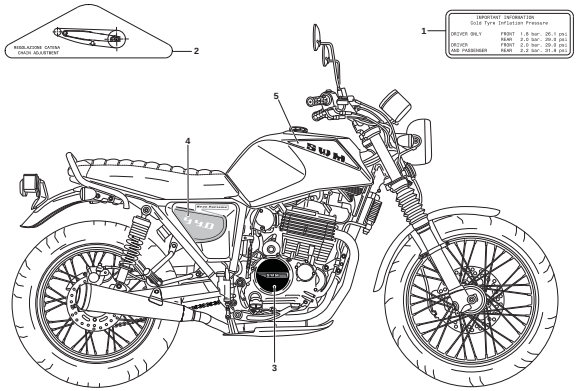

Pagina - Page - Page - Seite - Paja 82

SWM

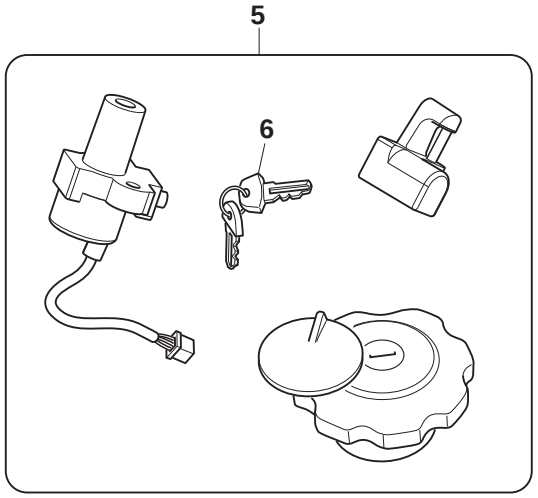
5
6

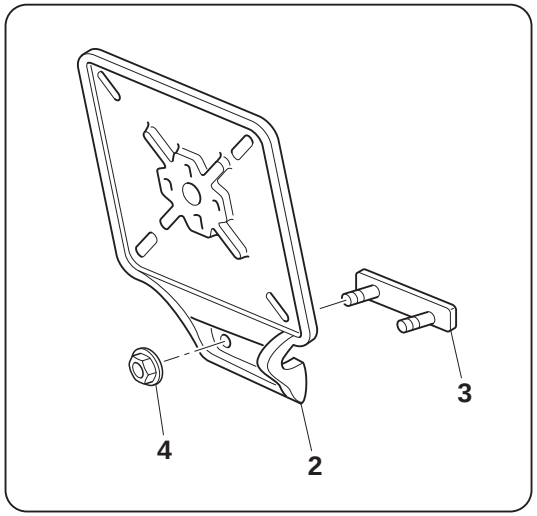
3
4
2

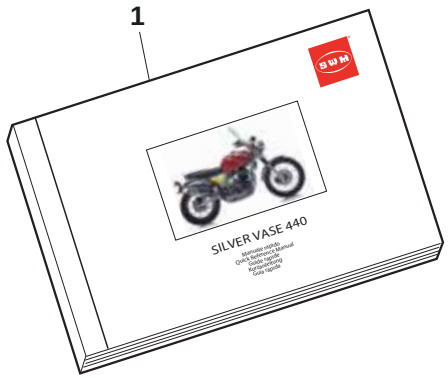
1
SILVER VASE 440

ATTREZZI DI ASSISTENZA, MANUALI E DOTAZIONI - SERVICE TOOLS, MANUALS AND EQUIPMENT
OUTILS D'ASSISTANCE, MANUELS ET EQUIPEMENT - HILFAUSRUSTUNG, HANDBUCH UND DOTIERUNG
HERRAMIENTAS DE ASISTENCIA, MANUALES Y EQUIPAMIENTO

TAVOLA
DRAWING
TABLE
BILD
TABLA
1

Note Notes Notes Marke Notas	Pos. No. N. Index Pos.	N. Cod. Code No. Nr. Code Code Nr N. Cod.	Q.tà Q.ty Q.te M.ge C.ad	DENOMINAZIONE	NAME	DESIGNATION	BESHREIBUNG	DENOMINACION
	1	A000P00980	1	QUICK MANUAL	QUICK MANUAL	GUIDE RAPIDE	QUICK MANUAL	QUICK MANUAL
	2	8000H3018	1	PIASTRA PORTATARGA	NUMBER PLATE HOLDER	SUPPORT PLAQUE D'IMM.	NUMMERNSCHILDHALTER	PORTAMATRÍCULA
	3	800073834	1	CATADIOTTRO CON FILETTO	REFLECTOR	CATADIOPTRE	RÜCKSTRAHLER	CATADIÓPTRICO
	4	Z00040717	2	DADO AUTOBLOCCANTE M4	SELF-LOCKING NUT M4	ECROU AUTOBLOQUANT M4	SELBSTSICHERNDE MUTTER M4	TUERCA AUTOBLOCANTE M4
	5	F000A00762	1	KIT SERRATURE	LOCK KIT	KIT SERRURES	SATZ SCHLÖSSER	KIT CERRADURAS
	6	F000P01565	1	CHIAVE GREZZA	KEY BLANK	CLÉ BRUTE	ROHSCHLÜSSEL	LLAVE EN BRUTO

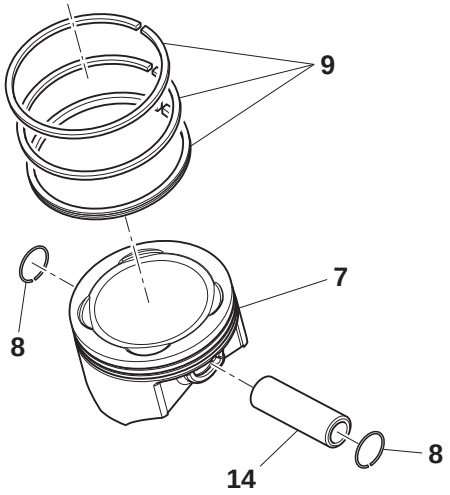
9
7
8
8
14

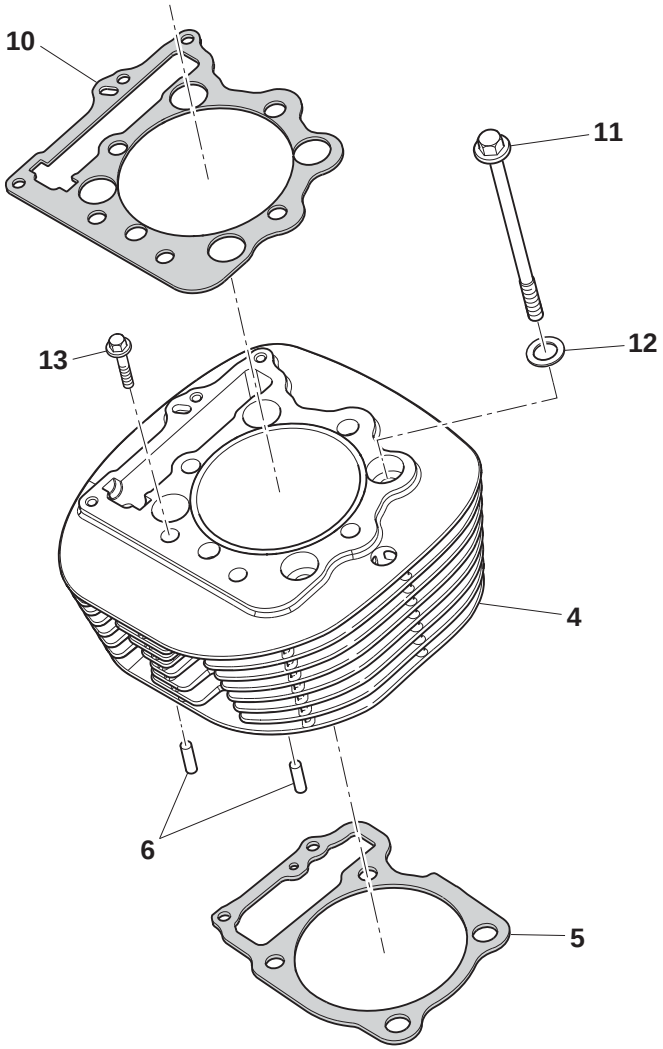
10
11
13
12
4
6
5

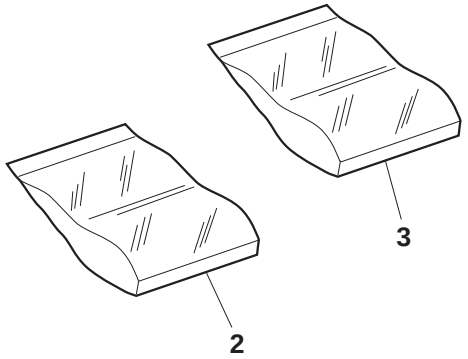
3
2

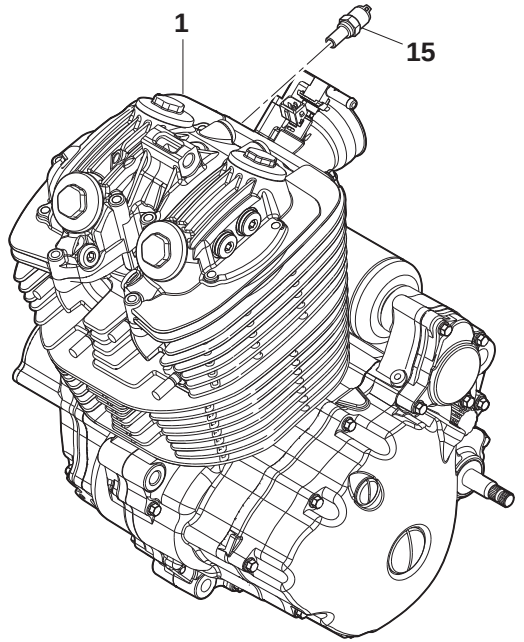
1
15

CILINDRO, PISTONE - CYLINDER, PISTON
CYLINDRE, PISTON - ZYLINDER, KOLBEN
CILINDRO, PISTON

TAVOLA
DRAWING
TABLE
BILD
TABLA
2

Note Notes Notes Marke Notas	Pos. No. N. Index Pos.	N. Cod. Code No. Nr. Code Code Nr N. Cod.	Q.tà Q.ty Q.te M.ge C.ad	DENOMINAZIONE	NAME	DESIGNATION	BESHREIBUNG	DENOMINACION
	1	M000A00857	1	MOTORE COMPLETO	COMPLETE ENGINE	MOTEUR COMPLET	MOTOR KOMPLETT	MOTOR COMPLETO
	2	M000A00927	1	KIT GUARNIZIONI MOTORE	ENGINE GASKET KIT	KIT JOINTS MOTEUR	SATZ MOTORDICHTUNGEN	KIT JUNTAS MOTOR
	3	M000A00928	1	KIT ANELLI DI TENUTA MOTORE	ENGINE SEALING RING KIT	KIT BAGUES D'ETANCHEITE MOTEUR	SATZ DICHTUNGSRINGE MOTOR	KIT ANILLOS DE ESTANQUEIDAD MOTOR
	4	27010699	1	CILINDRO MOTORE	CYLINDER	CYLINDRE	ZYLINDER	CILINDRO
	5	72130598	1	GUARNIZIONE CILINDRO	CYLINDER GASKET	JOINT CYLINDRE	ZYLINDERDICHTUNG	JUNTA CILINDRO
	6	72060091	2	BUSSOLA DI CENTRAGGIO Ø10.5x12x20	BUSH Ø10.5x12x20	DOUILLE Ø10.5x12x20	BUCHSE Ø10.5x12x20	CASQUILLO Ø10.5x12x20
	7	M000A00860	1	ASSIEME PISTONE COMPLETO	COMPLETE PISTON ASSY	PISTON COMPLET	ZUSAMMENBAU KOLBEN KOMPLETT	CONJUNTO PISTÓN COMPLETO
	8	72080065	2	ANELLO RITEGNO SPINOTTO	PISTON PIN RETAINING RING	BAGUE DE RETENUE GOUJON	RÜCKHALTERING KOLBENBOLZEN	ANILLO DE RETENCIÓN EJE DE PISTÓN
	9	21030595	1	KIT SEGMENTI PISTONE	PISTON RING KIT	KIT SEGMENTS PISTON	SATZ KOLBENRINGE	KIT SEGMENTOS PISTÓN
	10	72130590	1	GUARNIZIONE TESTA MOTORE	ENGINE HEAD GASKET	JOINT	DICHTUNG	JUNTA
	11	72011371	4	VITE CILINDRO M10x100	SCREW M10x100	VIS M10x100	SCHRAUBE M10x100	TORNILLO M10x100
	12	72040577	4	ROSETTA Ø10,8x18,6x2	WASHER Ø10,8x18,6x2	RONDELLE Ø10,8x18,6x2	UNTERLEGSCHEIBE Ø10,8x18,6x2	ARANDELA Ø10,8x18,6x2
	13	72010388	2	VITE M6x32	BOLT M6x32	VIS M6x32	SCHRAUBE M6x32	TORNILLO M6x32
	14	21040044	1	SPINOTTO	PISTON PIN	GOUJON	KOLBENBOLZEN	EJE DE PISTON
	15	31350056	1	SENSORE TEMPERATURA	TEMPERATURE SENSOR	CAPTEUR DE TEMPÉRATURE	TEMPERATURSENSOR	SENSOR TEMPERATURA

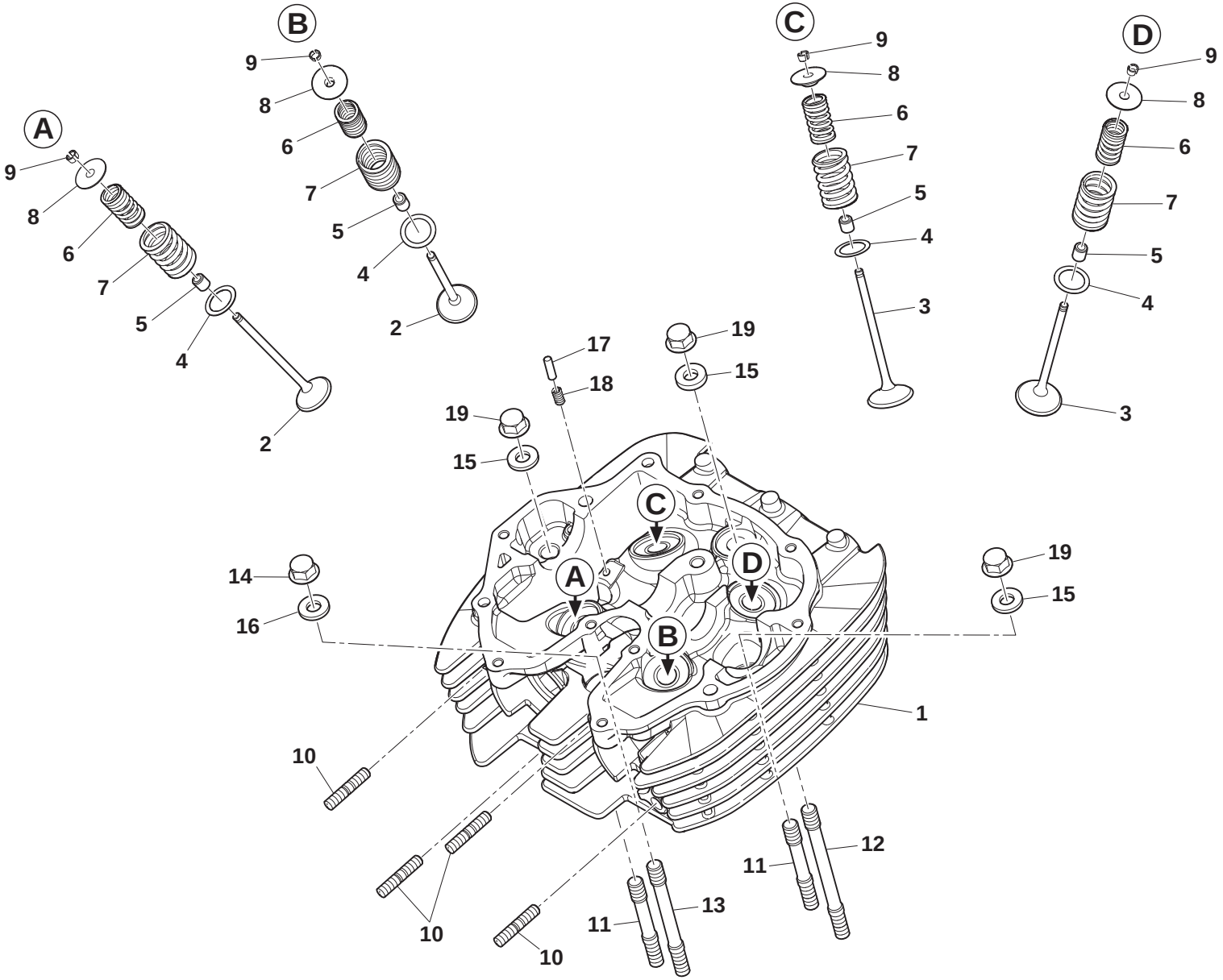
A
9
8
6
7
5
4
2
B
9
8
6
7
5
4
2
C
9
8
6
7
5
4
3
D
9
8
6
7
5
4
3
17
18
19
15
19
15
14
16
19
15
1
10
10
10
11
13
11
12

TESTA CILINDRO - CYLINDER HEAD
CULASSE - ZYLINDERKOPF
CULATA

TAVOLA
DRAWING
TABLE
BILD
TABLA

3

Note Notes Notes Marke Notas	Pos. No. N. Index Pos.	N. Cod. Code No. Nr. Code Code Nr N. Cod.	Q.tà Q.ty Q.te M.ge C.ad	DENOMINAZIONE	NAME	DESIGNATION	BESHREIBUNG	DENOMINACION
	1	22011001	1	TESTA MOTORE COMPLETA	ENGINE HEAD ASSY	CULASSE COMPLETE	MOTORKOPF KOMPLETT	CULATA COMPLETA
	2	22020044	2	VALVOLA DI SCARICO	EXHAUST VALVE	SOUPAPE D'ECHAPPEMENT	AUSLASSVENTIL	VÁLVULA DE ESCAPE
	3	22020043	2	VALVOLA DI ASPIRAZIONE	INTAKE VALVE	SOUPAPE D'ADMISSION	EINLASSVENTIL	VÁLVULA DE ADMISIÓN
	4	72040365	4	ROSETTA PER MOLLA Ø18.7x26.3x1	OUTER SPRING WASHER 18.7x26.3x1	RONDELLE Ø18.7x26.3x1	UNTERLEGSCHEIBE Ø18.7x26.3x1	ARANDELA Ø18.7x26.3x1
	5	72110026	4	TENUTA VALVOLE	VALVE SEALING	D'ETANCHEITE SOUPAPES	VENTILDICHTUNGS	ESTANQUEIDAD VALVULAS Ø5
	6	72120082	4	MOLLA INTERNA VALVOLA	INTERNAL VALVE SPRING	RESSORT INTERIEUR	INTERNE FEDER	MUELLE INTERNO
	7	72120083	4	MOLLA ESTERNA VALVOLA	EXTERNAL VALVE SPRING	RESSORT EXTERIEUR	EXTERNE FEDER	MUELLE EXTERNO
	8	22030003	4	SCODELLINO	RETAINER	RONDELLE À RESSORT	FEDERTELLER	ASIENTO
	9	22040003	4	SEMICONO	COLLET	DEMI-CONE	KEGELHÄLFTE	SEMICONO
	10	72011809	4	VITE M8x41	BOLT M8x41	VIS M8x41	SCHRAUBE M8x41	TORNILLO M8x41
	11	72011372	2	PRIGIONIERO M10x86	STUD BOLT M10x86	PRISONNIER M10x86	STIFTSCHRAUBE M10x86	PRISIONERO M10x86
	12	72011373	1	PRIGIONIERO M10x118	STUD BOLT M10x118	PRISONNIER M10x118	STIFTSCHRAUBE M10x118	PRISIONERO M10x118
	13	72011376	1	PRIGIONIERO M10x99	STUD BOLT M10x99	PRISONNIER M10x99	STIFTSCHRAUBE M10x99	PRISIONERO M10x99
	14	72020359	1	TAPPO A VITE M10x1.25	CAP NUT M10x1.25	BOUCHON M10x1.25	STOPFEN M10x1.25	TAPON M10x1.25
	15	72040369	3	ROSETTA Ø10.3x20.8x3	WASHER Ø10.3x20.8x3	RONDELLE Ø10.3x20.8x3	UNTERLEGSCHEIBE Ø10.3x20.8x3	ARANDELA Ø10.3x20.8x3
	16	72040370	1	ROSETTA Ø10.3x25x4	WASHER Ø10.3x25x4	RONDELLE Ø10.3x25x4	UNTERLEGSCHEIBE Ø10.3x25x4	ARANDELA Ø10.3x25x4
	17	72060088	1	PERNO	PIN	AXE	BOLZEN	EJE
	18	72120086	1	MOLLA LEVA DECOMPRESSORE	DECOMPRESSION LEVER SPRING	RESSORT	FEDER	MUELLE
	19	72020024	3	TAPPO A VITE M10 x 1,25	CAP NUT M10 x 1,25	BOUCHON M10 x 1,25	DECKEL M10 x 1,25	TAPON M10 x 1,25

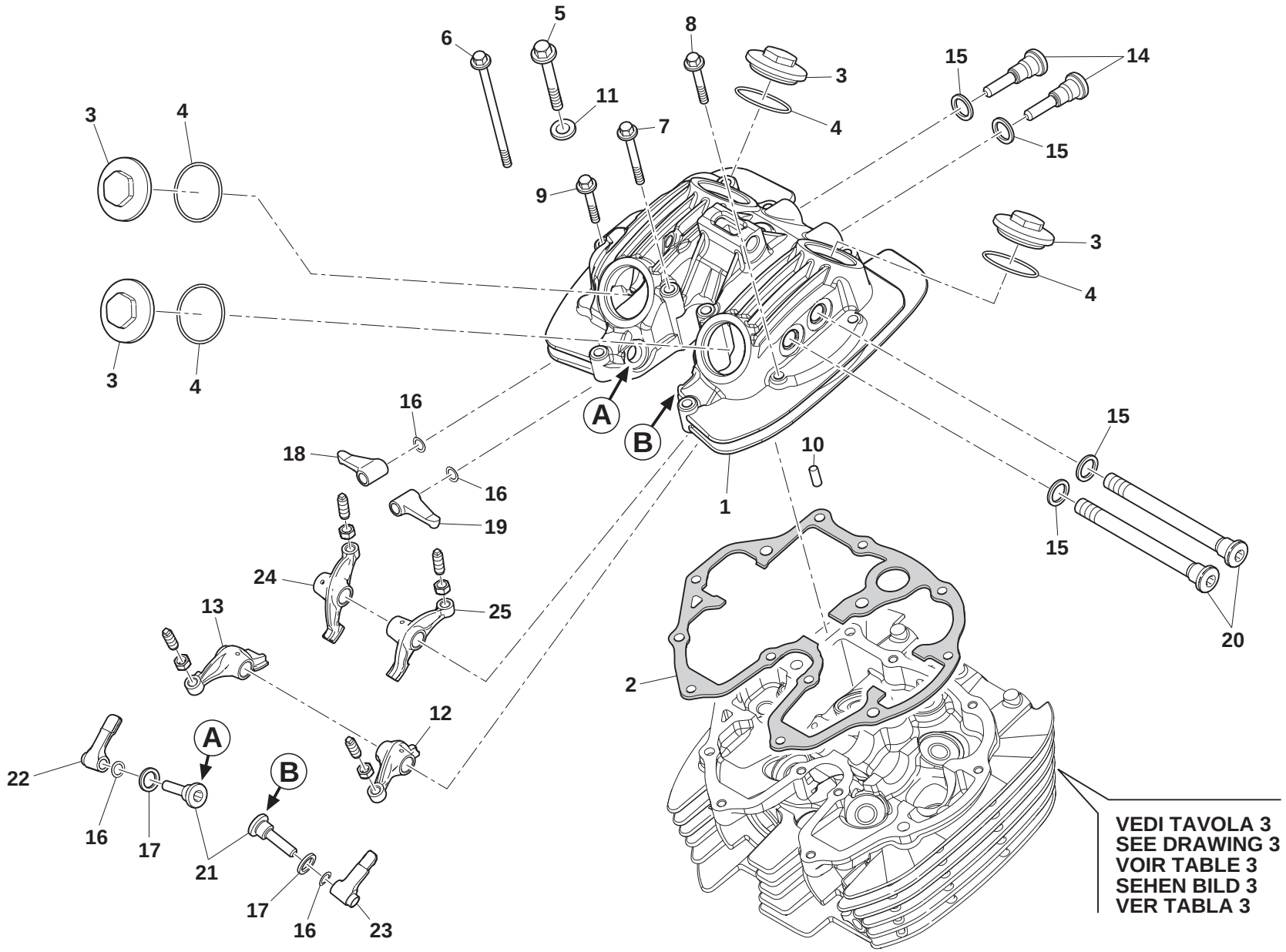
VEDI TAVOLA 3
SEE DRAWING 3
VOIR TABLE 3
SEHEN BILD 3
VER TABLA 3

COPERCHIO VALVOLE - VALVE COVER
COUVERCLE CULASSE - ZYLINDERKOPFDECKEL
TAPA CULATA

TAVOLA
DRAWING
TABLE
BILD
TABLA

4

Note Notes Notes Marke Notas	Pos. No. N. Index Pos.	N. Cod. Code No. Nr. Code Code Nr N. Cod.	Q.tà Q.ty Q.te M.ge C.ad	DENOMINAZIONE	NAME	DESIGNATION	BESHREIBUNG	DENOMINACION
	1	22150272	1	COPERCHIO TESTA MOTORE	CYLINDER HEAD COVER	COUVERCLE CULASSE	ZYLINDERKOPFDECKEL	TAPA CULATA
	2	72130392	1	GUARNIZIONE COPERCHIO TESTA	HEAD COVER GASKET	JOINT COUVERCLE CULASSE	DICHTUNG ZYLINDERKOPFDECKEL	JUNTA TAPA CULATA
	3	22140006	4	TAPPO VALVOLA	VALVE PLUG	BOUCHON	STOPFEN	TAPON
	4	72150013	4	ANELLO OR	O-RING	JOINT TORIQUE	O-RING	JUNTA TORICA
	5	72011374	1	VITE M8x70	BOLT M8x70	VIS M8x70	SCHRAUBE M8x70	TORNILLO M8x70
	6	72011917	3	VITE M6x119	BOLT M6x119	VIS M6x119	SCHRAUBE M6x119	TORNILLO M6x119
	7	72010392	2	VITE M6x65	BOLT M6x65	VIS M6x65	SCHRAUBE M6x65	TORNILLO M6x65
	8	72010389	1	VITE M6x40	BOLT M6x40	VIS M6x40	SCHRAUBE M6x40	TORNILLO M6x40
	9	72010169	6	VITE M6x35	BOLT M6x35	VIS M6x35	SCHRAUBE M6x35	TORNILLO M6x35
	10	72060012	2	SPINA Ø8x14	DOWEL PIN Ø8x14	GOUPILLE Ø8x14	STIFT Ø8x14	CLAVIJA Ø8x14
	11	72040156	1	ROSETTA IN RAME Ø8.5x18x2	COPPER WASHER Ø8.5x18x2	RONDELLE Ø8.5x18x2	UNTERLEGSCHEIBE Ø8.5x18x2	ARANDELA Ø8.5x18x2
	12	22050019	1	BILANCIERE	ROCKER ARM	CULBUTEUR	UMLENK-HEBEL	BALANCÍN
	13	22050020	1	BILANCIERE	ROCKER ARM	CULBUTEUR	UMLENK-HEBEL	BALANCÍN
	14	22070014	2	ALBERO BILANCIERE	ROCKER ARM SHAFT	ARBRE	WELLE	ARBOL
	15	72040364	4	ROSETTA IN RAME Ø14.2x20x1.5	COPPER WASHER Ø14.2x20x1.5	RONDELLE Ø14.2x20x1.5	UNTERLEGSCHEIBE Ø14.2x20x1.5	ARANDELA Ø14.2x20x1.5
	16	73131480	4	ROSETTA Ø8.2x12x0.3	WASHER Ø8.2x12x0.3	RONDELLE Ø8.2x12x0.3	UNTERLEGSCHEIBE Ø8.2x12x0.3	ARANDELA Ø8.2x12x0.3
	17	72040363	2	ROSETTA IN RAME Ø12.2x18.5x2	COPPER WASHER Ø12.2x18.5x2	RONDELLE Ø12.2x18.5x2	UNTERLEGSCHEIBE Ø12.2x18.5x2	ARANDELA Ø12.2x18.5x2
	18	22050018	1	BILANCIERE	ROCKER ARM	CULBUTEUR	UMLENK-HEBEL	BALANCÍN
	19	22050018	1	BILANCIERE	ROCKER ARM	CULBUTEUR	UMLENK-HEBEL	BALANCÍN
	20	22070015	2	ALBERO PRINCIPALE BILANCIERE M14x1.5	MAIN ROCKER ARM SHAFT M14x1.5	ARBRE M14x1.5	WELLE M14x1.5	ARBOL M14x1.5
	21	22070013	2	ALBERO BILANCIERE	ROCKER ARM SHAFT	ARBRE	WELLE	ARBOL
	22	22050016	1	BILANCIERE SINISTRO	ROCKER ARM L.H.	CULBUTEUR G.	UMLENK-HEBEL L.	BALANCÍN IZQ.
	23	22050017	1	BILANCIERE DESTRO	ROCKER ARM R.H.	CULBUTEUR D.	UMLENK-HEBEL R.	BALANCÍN DER.
	24	22050019	2	BILANCIERE	ROCKER ARM	CULBUTEUR	UMLENK-HEBEL	BALANCÍN
	25	22050020	1	BILANCIERE	ROCKER ARM	CULBUTEUR	UMLENK-HEBEL	BALANCÍN

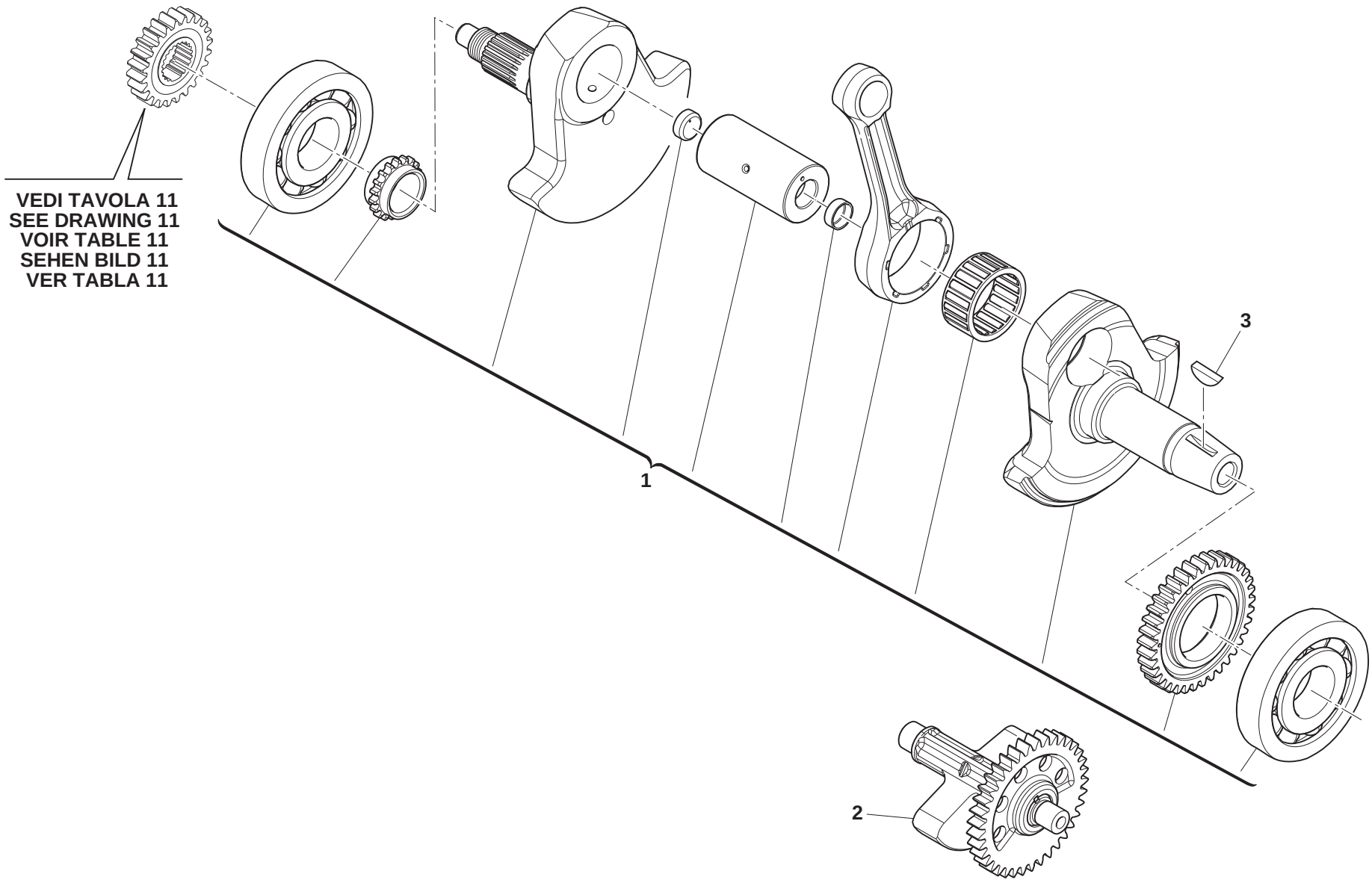
VEDI TAVOLA 11
SEE DRAWING 11
VOIR TABLE 11
SEHEN BILD 11
VER TABLA 11
1
2
3

MANOVELLISMO - CRANKSHAFT
VILEBREQUIN - KURBELWELLE
CIGÜEÑAL

TAVOLA
DRAWING
TABLE
BILD
TABLA
5

Note Notes Notes Marke Notas	Pos. No. N. Index Pos.	N. Cod. Code No. Nr. Code Code Nr N. Cod.	Q.tà Q.ty Q.te M.ge C.ad	DENOMINAZIONE	NAME	DESIGNATION	BESHREIBUNG	DENOMINACION
	1	21010213	1	ALBERO MOTORE COMPLETO	COMPLETE CRANKSHAFT	VILEBREQUIN COMPLET	KURBELWELLE KOMPLETT	CIGÜEÑAL COMPLETO
	2	21090003	1	ASSIEME CONTRALBERO	BALANCING COUNTERSHAFT ASSY	ARBRE D'EQUILIBRE	GLEICHGEWICHTSVORGELEGEWELLE	CONTRAEJE DE EQUILIBRIO
	3	21210014	1	CHIAVETTA	WOODRUFF KEY	CLÉ	FEDERKEIL	MEMORIA

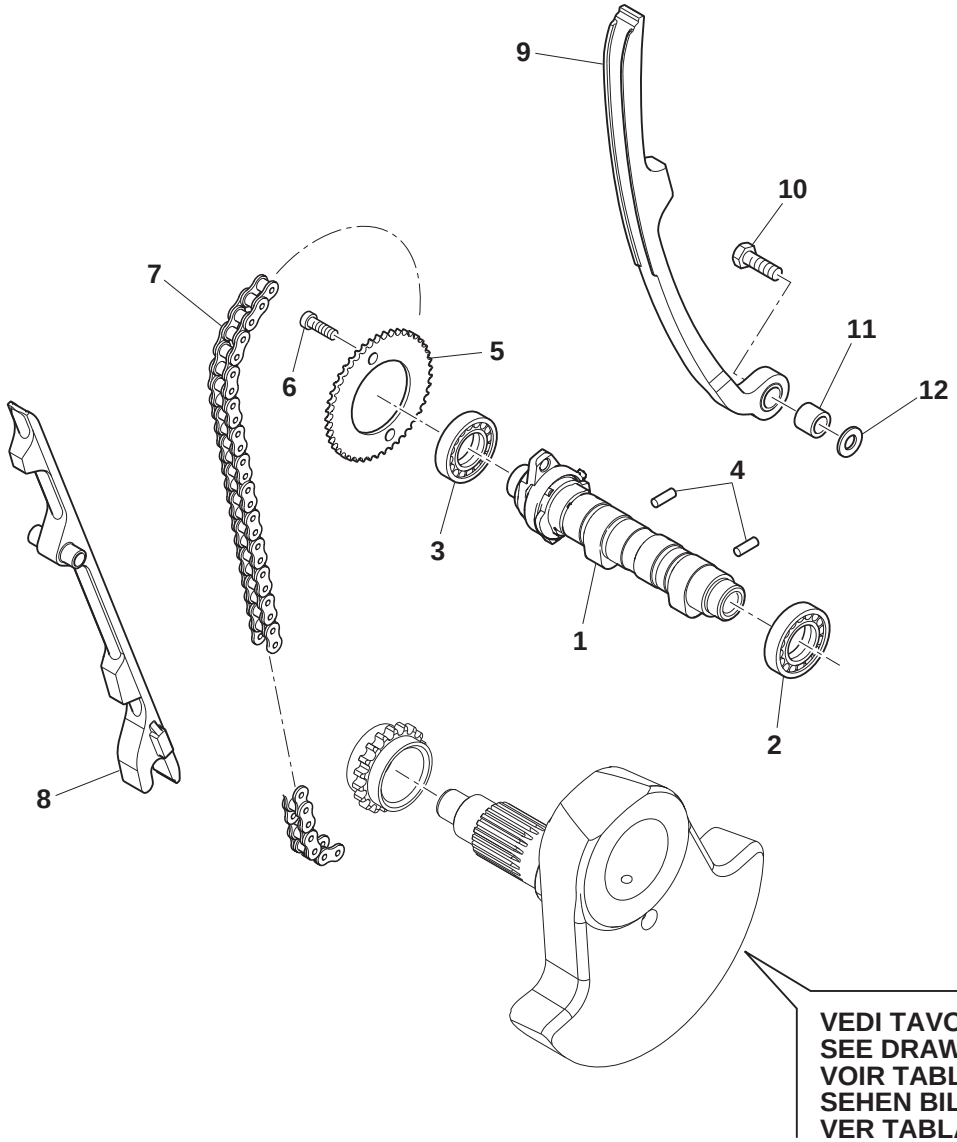
9
10
7
11
12
5
6
4
3
1
2
8
VEDI TAVOLA 5
SEE DRAWING 5
VOIR TABLE 5
SEHEN BILD 5
VER TABLA 5

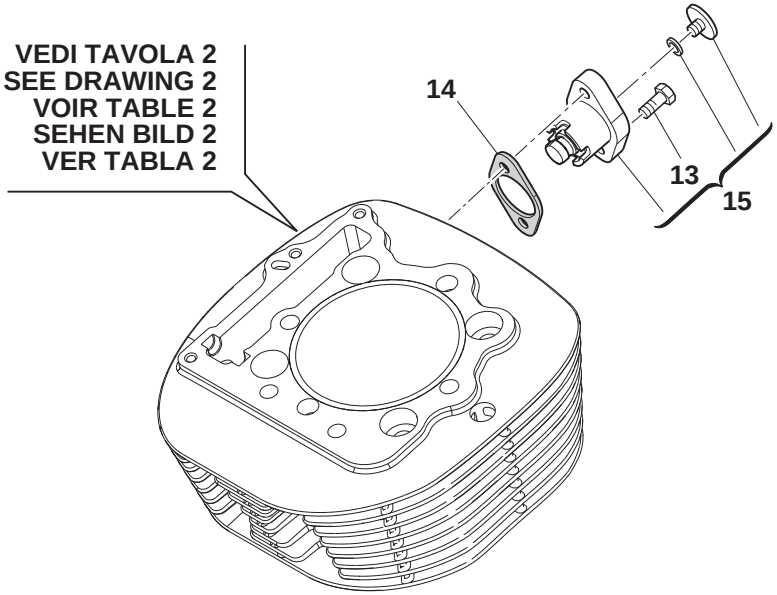
VEDI TAVOLA 2
SEE DRAWING 2
VOIR TABLE 2
SEHEN BILD 2
VER TABLA 2
14
13
15

DISTRIBUZIONE - VALVE TIMING
DISTRIBUTION - VENTILSTEUERUNG
DISTRIBUCION

TAVOLA
DRAWING
TABLE
BILD
TABLA

6

Note Notes Notes Marke Notas	Pos. No. N. Index Pos.	N. Cod. Code No. Nr. Code Code Nr N. Cod.	Q.tà Q.ty Q.te M.ge C.ad	DENOMINAZIONE	NAME	DESIGNATION	BESHREIBUNG	DENOMINACION
	1	22080029	1	ASSIEME ALBERO A CAMME	CAMSHAFT	ARBRE A CAMES	NOCKENWELLE	ARBOL DE LEVAS
	2	70090199	1	CUSCINETTO Ø20x37x9	BEARING Ø20x37x9	ROULEMENT Ø20x37x9	LAGER Ø20x37x9	COJINETE Ø20x37x9
	3	70090198	1	CUSCINETTO Ø18x37x9	BEARING Ø18x37x9	ROULEMENT Ø18x37x9	LAGER Ø18x37x9	COJINETE Ø18x37x9
	4	72060090	2	PERNO 10x18	PIN 10x18	AXE 10x18	BOLZEN 10x18	EJE 10x18
	5	15170067	1	INGRANAGGIO DISTRIBUZIONE	TIMING DRIVEN SPROCKET	PIGNON DE DISTRIBUTION	ZAHNRAD	ENGRANAJE DISTRIBUCIÓN
	6	72011369	2	VITE TE M7x9.4	HEXAGON SOCKET-HEAD BOLT M7x9.4	VIS M7x9.4	SCHRAUBE M7x9.4	TORNILLO M7x9.4
	7	15160015	1	CATENA DISTRIBUZIONE	TIMING CHAIN	CHAINE DE DISTRIBUTION	VENTILSTEUERKETTE	CADENA DISTRIBUCION
	8	73011167	1	PATTINO CATENA	CHAIN SLIDER	PATIN CHAÎNE	KETTENSPANNERAUFLAGE	PATÍN CADENA
	9	73011166	1	PIASTRA TENDICATENA	CHAIN SLIDER PLATE	PLAQUE	PLATTE	PLACA
	10	72010163	1	VITE M6x25	BOLT M6x25	VIS M6x25	SCHRAUBE M6x25	TORNILLO M6x25
	11	72060089	1	BUSSOLA PIASTRA TENDICATENA	BUSH	DOUILLE	BUCHSE	CASQUILLO
	12	72040167	1	ROSETTA Ø6.5x14.2x1	WASHER Ø6.5x14.2x1	RONDELLE Ø6.5x14.2x1	UNTERLEGSCHEIBE Ø6.5x14.2x1	ARANDELA Ø6.5x14.2x1
	13	72010157	2	VITE M6x16	SCREW M6x16	VIS M6x16	SCHRAUBE M6x16	TORNILLO M6x16
	14	72130438	1	GUARNIZIONE TENDICATENA	TENSIONER GASKET	JOINT	DICHTUNG	JUNTA
	15	15150022	1	TENDICATENA	CHAIN TENSIONER	TENDEUR DE CHAÎNE	KETTENSPANNER	TENSOR DE CADENA

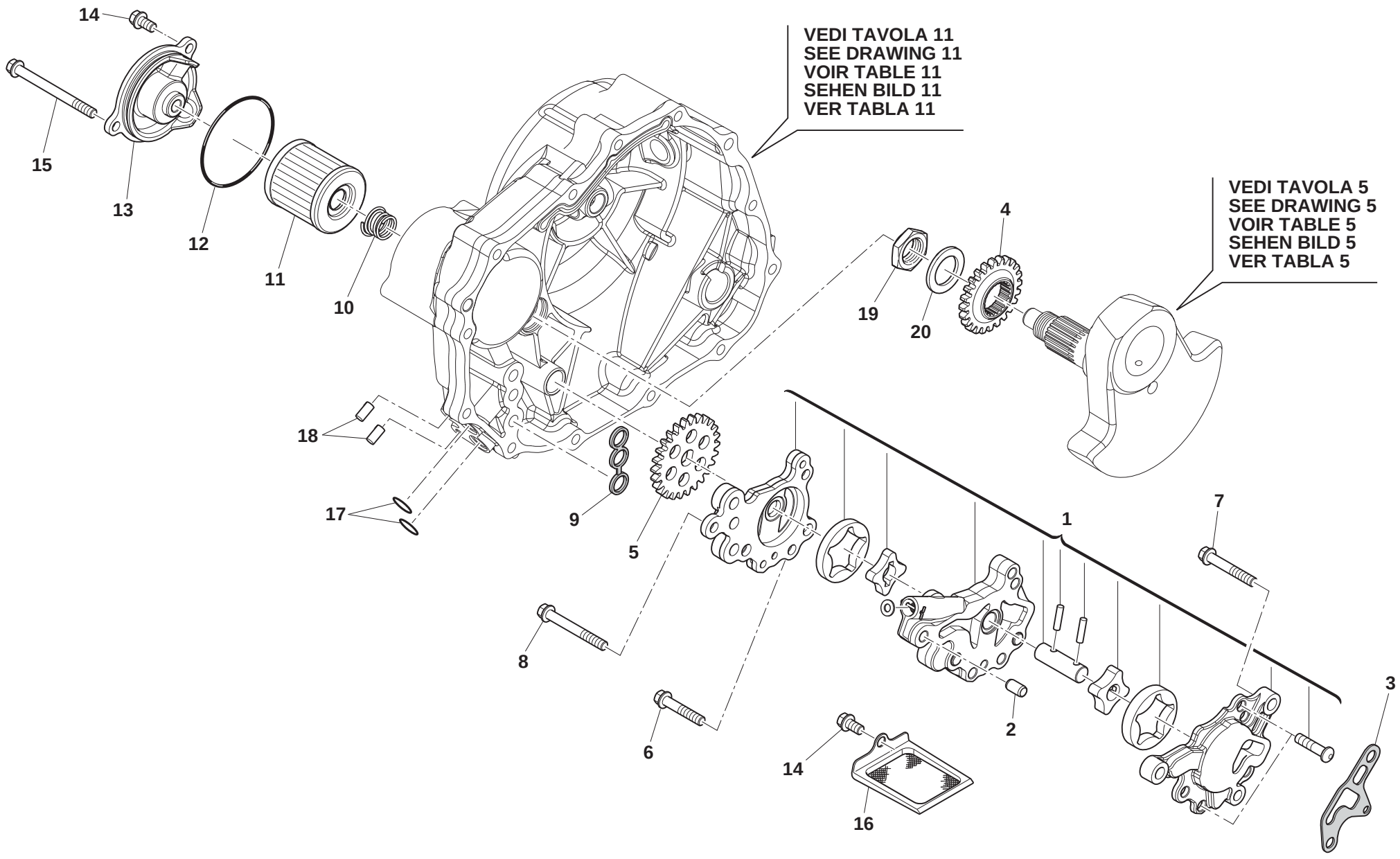
14
15
13
12
11
10
VEDI TAVOLA 11
SEE DRAWING 11
VOIR TABLE 11
SEHEN BILD 11
VER TABLA 11
VEDI TAVOLA 5
SEE DRAWING 5
VOIR TABLE 5
SEHEN BILD 5
VER TABLA 5
4
19
20
18
17
9
5
1
7
8
6
2
3
14
16

LUBRIFICAZIONE - LUBRIFICATION
GRAISSAGE - SCHMIERUNG
LUBRICACION

Note Notes Notes Marke Notas	Pos. No. N. Index Pos.	N. Cod. Code No. Nr. Code Code Nr N. Cod.	Q.tà Q.ty Q.te M.ge C.ad	DENOMINAZIONE	NAME	DESIGNATION	BESHREIBUNG	DENOMINACION
	1	20010077	1	POMPA OLIO COMPLETA	COMPLETE OIL PUMP	POMPE A HUILE COMPLETE	ÖLPUMPE KOMPLETT	BOMBA ACEITE COMPLETA
	2	72060012	2	BUSSOLA Ø10x14	BUSHING Ø10x14	DOUILLE Ø10x14	BUCHSE Ø10x14	CASQUILLO Ø10x14
	3	72130423	1	GUARNIZIONE POMPA OLIO	OIL PUMP GASKET	JOINT POMPE A HUILE	DICHTUNG ÖLPUMPE	JUNTA BOMBA ACEITE
	4	20060005	1	INGRANAGGIO CONDUTTORE POMPA OLIO	DRIVE GEAR, OIL PUMP	ENGRENAGE CONDUCTEUR	ANTRIEBSZAHNRAD	ENGRANAJE CONDUCTOR
	5	20060006	1	INGRANAGGIO POMPA OLIO	OIL PUMP GEAR	ENGRENAGE POMPE	PUMPENZAHNRAD	ENGRANAJE BOMBA
	6	72010388	1	VITE M6x32	BOLT M6x32	VIS M6x32	SCHRAUBE M6x32	TORNILLO M6x32
	7	72010389	1	VITE M6x40	BOLT M6x40	VIS M6x40	SCHRAUBE M6x40	TORNILLO M6x40
	8	72010173	1	VITE M6x50	BOLT M6x50	VIS M6x50	SCHRAUBE M6x50	TORNILLO M6x50
	9	72150127	1	ANELLO IN GOMMA A 3 FORI	RING	BAGUE	RING	ANILLO
	10	72120159	1	MOLLA	SPRING	RESSORT	FEDER	MUELLE
	11	8000B0593	1	FILTRO OLIO	OIL FILTER	FILTRE À HUILE	ÖLFILTER	FILTRO ACEITE
	12	72150220	1	ANELLO OR	O-RING	JOINT TORIQUE	O-RING	JUNTA TORICA
	13	14090073	1	COPERCHIO FILTRO OLIO	OIL FILTER COVER	COUVERCLE	DECKEL	TAPA
	14	72010157	2	VITE M6x16	BOLT M6x16	VIS M6x16	SCHRAUBE M6x16	TORNILLO M6x16
	15	72010394	1	VITE M6x90	BOLT M6x90	VIS M6x90	SCHRAUBE M6x90	TORNILLO M6x90
	16	11060005	1	FILTRO A RETE	MESH FILTER	FILTRE À GRILLE	NETZFILTER	FILTRO DE RED
	17	72150213	2	ANELLO OR	O-RING	JOINT TORIQUE	O-RING	JUNTA TORICA
	18	72060019	2	BUSSOLA Ø10x14	DOWEL PIN Ø10x14	DOUILLE Ø10x14	BUCHSE Ø10x14	CASQUILLO Ø10x14
	19	72020360	1	DADO M18x1	NUT M18x1	ECROU M18x1	MUTTER M18x1	TUERCA M18x1
	20	72040367	1	RONDELLA	WASHER	RONDELLE	UNTERLEGSCHEIBE	ARANDELA

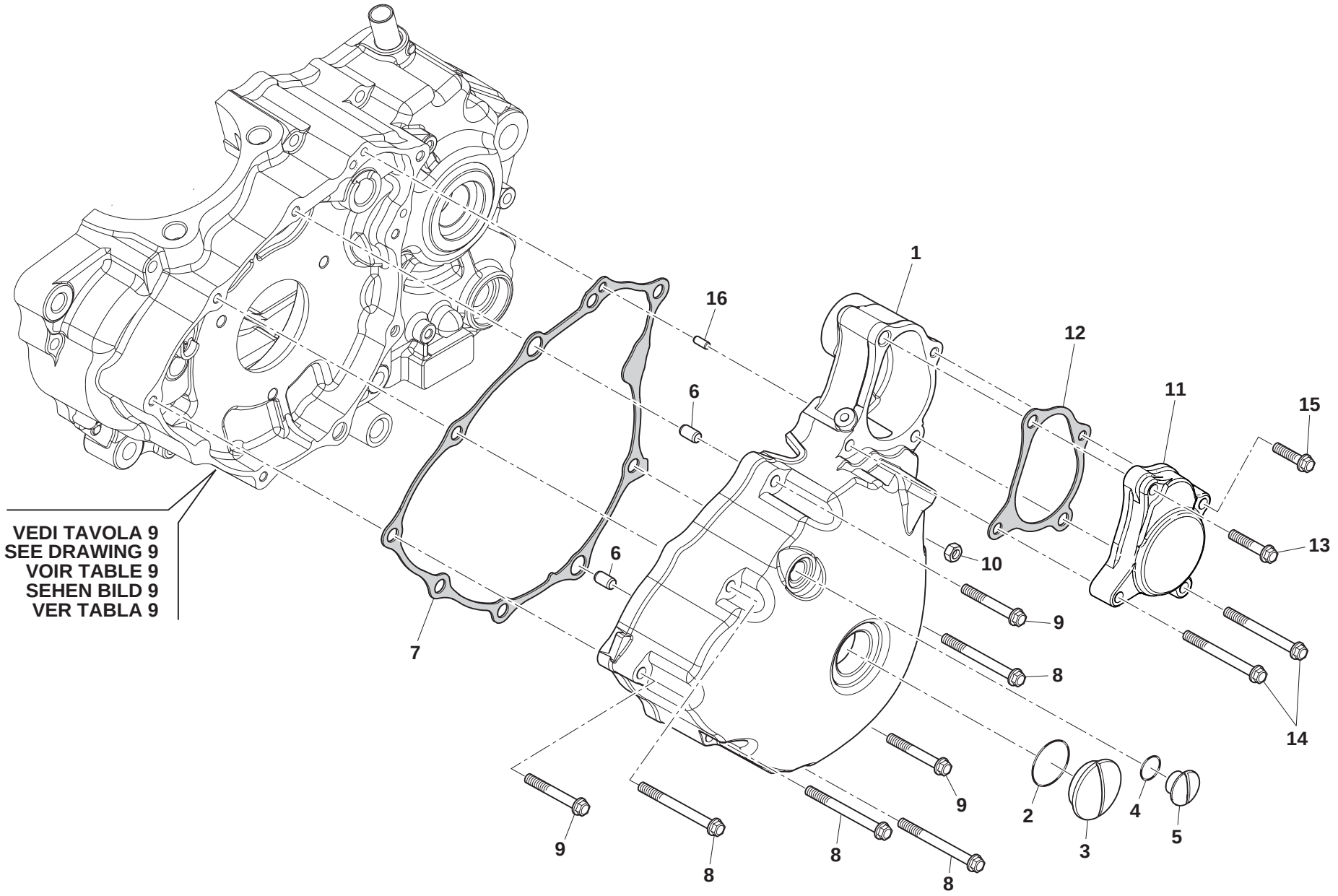

VEDI TAVOLA 9
SEE DRAWING 9
VOIR TABLE 9
SEHEN BILD 9
VER TABLA 9

COPERCHIO CARTER SINISTRO - LEFT CRANKCASE COVER
COUVERCLES CARTER GAUCHE - GEHAUSEDECKEL LINKS
TAPAS BANCADA IZQUIERDA

TAVOLA
DRAWING
TABLE
BILD
TABLA

8

Note Notes Notes Marke Notas	Pos. No. N. Index Pos.	N. Cod. Code No. Nr. Code Code Nr N. Cod.	Q.tà Q.ty Q.te M.ge C.ad	DENOMINAZIONE	NAME	DESIGNATION	BESHREIBUNG	DENOMINACION
	1	14010970	1	COPERCHIO ACCENSIONE	IGNITION COVER	COUVERCLE ALLUMAGE	DECKEL ZÜNDUNG	TAPA ENCENDIDO
	2	72150009	1	ANELLO OR	O-RING	JOINT TORIQUE	O-RING	JUNTA TORICA
	3	14060063	1	TAPPO GRANDE ISPEZIONE	BIG INSPECTION CAP	BOUCHON GRAND	STOPFEN	TAPON GRANDE
	4	72150021	1	ANELLO OR	O-RING	JOINT TORIQUE	O-RING	JUNTA TORICA
	5	14060064	1	TAPPO PICCOLO ISPEZIONE	SMALL INSPECTION CAP	BOUCHON PETIT	STOPFEN	TAPON
	6	72060014	2	BUSSOLA Ø10x20	DOWEL PIN Ø10x20	DOUILLE Ø10x20	BUCHSE Ø10x20	CASQUILLO Ø10x20
	7	72130595	1	GUARNIZIONE COPERCHIO ACCENSIONE	LEFT CRANKCASE COVER GASKET	JOINT	DICHTUNG	JUNTA
	8	72010174	4	VITE M6x60	BOLT M6x60	VIS M6x60	SCHRAUBE M6x60	TORNILLO M6x60
	9	72010173	2	VITE M6x50	BOLT M6x50	VIS M6x50	SCHRAUBE M6x50	TORNILLO M6x50
	10	72020358	1	DADO M6	NUT M6	ECROU M6	MUTTER M6	TUERCA M6
	11	14070206	1	COPERCHIO AVVIAMENTO	KICK START COVER	COUVERCLE DE DEMARRAGE	DEKEL KICKSTARTER	TAPA ARRANQUE
	12	72130395	1	GUARNIZIONE COPERCHIO AVVIAMENTO	KICK START COVER GASKET	JOINT	DICHTUNG	JUNTA
	13	72010169	1	VITE M6x35	BOLT M6x35	VIS M6x35	SCHRAUBE M6x35	TORNILLO M6x35
	14	72010392	2	VITE M6x65	BOLT M6x65	VIS M6x65	SCHRAUBE M6x65	TORNILLO M6x65
	15	72010387	1	VITE M6x28	BOLT M6x28	VIS M6x28	SCHRAUBE M6x28	TORNILLO M6x28
	16	72060012	2	SPINA Ø8x14	DOWEL Ø8x14	GOUPILLE Ø8x14	STIFT Ø8x14	CLAVIJA Ø8x14

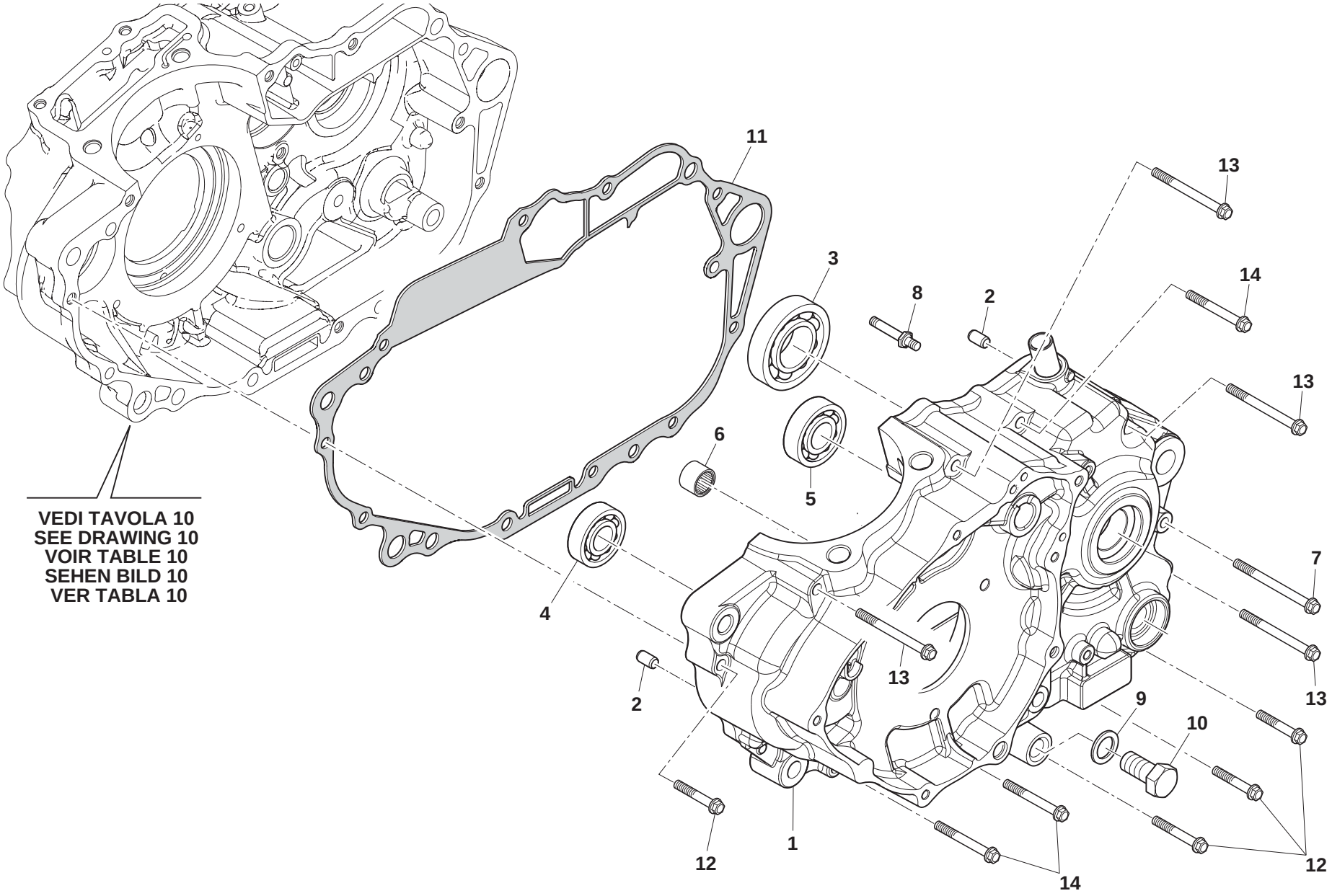
VEDI TAVOLA 10
SEE DRAWING 10
VOIR TABLE 10
SEHEN BILD 10
VER TABLA 10
11
3
8
2
13
14
13
6
5
4
7
13
2
13
9
10
12
1
14
12

SEMICARTER SINISTRO - LEFT HALF CRANKCASE
CARTER GAUCHE - GEHAUSEDECKEL LINKS
BANCADA IZQUIERDA

Note Notes Notes Marke Notas	Pos. No. N. Index Pos.	N. Cod. Code No. Nr. Code Code Nr N. Cod.	Q.tà Q.ty Q.te M.ge C.ad	DENOMINAZIONE	NAME	DESIGNATION	BESHREIBUNG	DENOMINACION
	1	11010664	1	CARTER SINISTRO	LEFT CRANKCASE	CARTER G.	DECKEL R.	CÁRTER DER.
	2	72060019	2	BUSSOLA Ø10x16	DOWEL PIN Ø10x16	DOUILLE Ø10x16	BUCHSE Ø10x16	CASQUILLO Ø10x16
	3	70090194	1	CUSCINETTO 6006	BEARING 6006	ROULEMENT 6006	LAGER 6006	COJINETE 6006
	4	70090193	1	CUSCINETTO 6301/13/C3	BEARING 6301/13/C3	ROULEMENT 6301/13/C3	LAGER 6301/13/C3	COJINETE 6301/13/C3
	5	70090195	1	CUSCINETTO 6203Z	BEARING 6203Z	ROULEMENT 6203Z	LAGER 6203Z	COJINETE 6203Z
	6	70090016	1	CUSCINETTO HK1210	BEARING HK1210	ROULEMENT HK1210	LAGER HK1210	COJINETE HK1210
	7	72010176	1	VITE M6x80	BOLT M6x80	VIS M6x80	SCHRAUBE M6x80	TORNILLO M6x80
	8	72011363	1	VITE M8x41	BOLT M8x41	VIS M8x41	SCHRAUBE M8x41	TORNILLO M8x41
	9	72040159	1	ROSETTA DI TENUTA	ALUMINIUM WASHER	RONDELLE D'ETANCHEITE	DICHTUNGSSCHEIBE	ARANDELA DE ESTANQUEIDAD
	10	72012089	1	VITE SCARICO OLIO	OIL DRAIN BOLT	VIS VIDANGE D'HUILE	ÖLABLASSSCHRAUBE	TORNILLO VACIADO ACEITE
	11	72130390	1	GUARNIZIONE	GASKET	JOINT	DICHTUNG	JUNTA
	12	72010169	4	VITE M6x35	BOLT M6x35	VIS M6x35	SCHRAUBE M6x35	TORNILLO M6x35
	13	72010392	5	VITE M6x65	BOLT M6x65	VIS M6x65	SCHRAUBE M6x65	TORNILLO M6x65
	14	72010173	3	VITE M6x50	BOLT M6x50	VIS M6x50	SCHRAUBE M6x50	TORNILLO M6x50

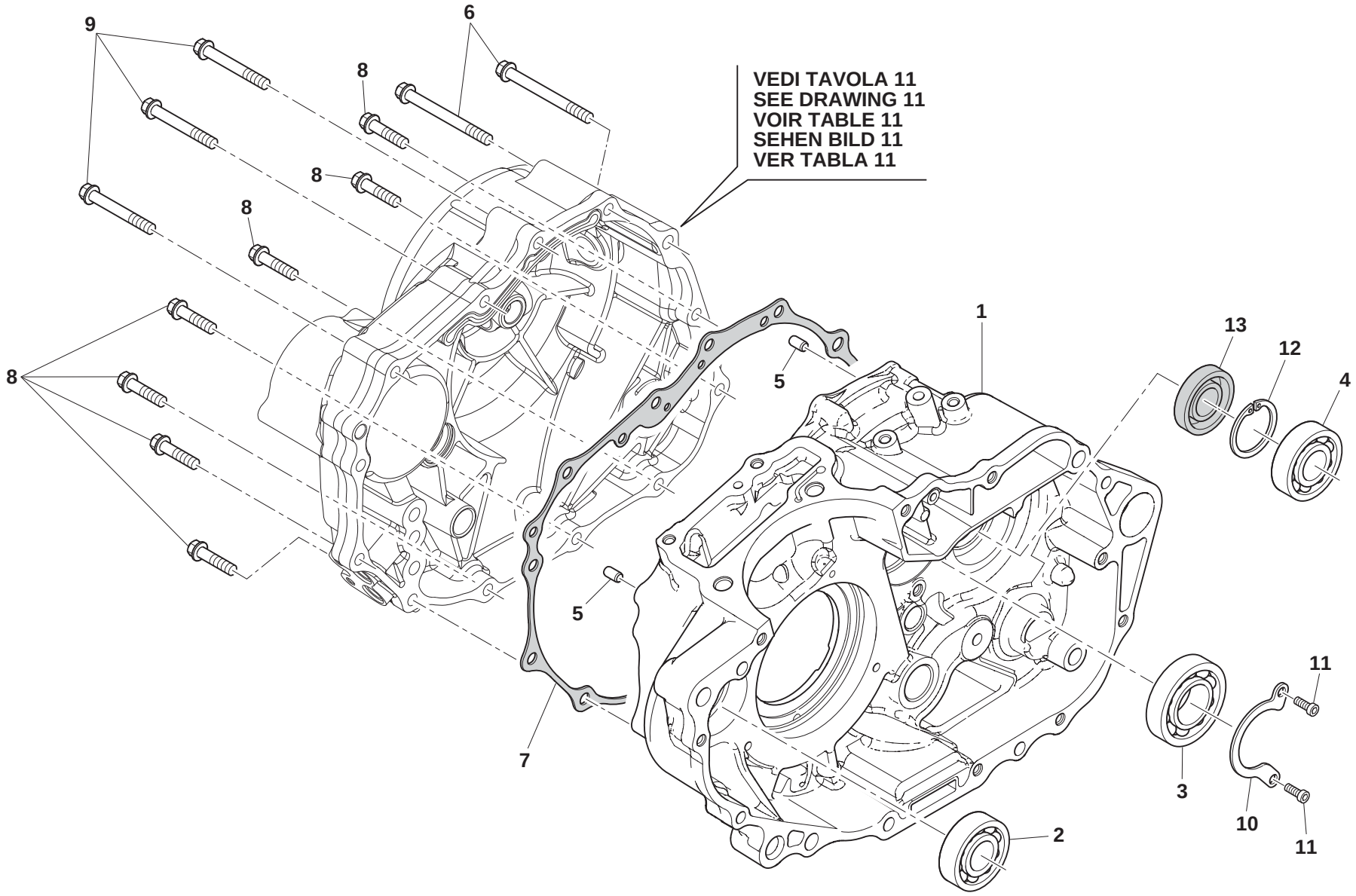
9
6
8
8
8
8
VEDI TAVOLA 11
SEE DRAWING 11
VOIR TABLE 11
SEHEN BILD 11
VER TABLA 11
1
13
12
4
5
5
7
3
2
10
11
11

SEMICARTER DESTRO - RIGHT HALF CRANKCASE
CARTER DROIT - GEHAUSEDECKEL RECHTS
BANCADA DERECHO

TAVOLA
DRAWING
TABLE
BILD
TABLA
10

Note Notes Notes Marke Notas	Pos. No. N. Index Pos.	N. Cod. Code No. Nr. Code Code Nr N. Cod.	Q.tà Q.ty Q.te M.ge C.ad	DENOMINAZIONE	NAME	DESIGNATION	BESHREIBUNG	DENOMINACION
	1	12010623	1	CARTER DESTRO	RIGHT CRANKCASE	CARTER D.	GEHAUSE R.	CARTER DER.
	2	70090192	1	CUSCINETTO 6302/C3	BEARING 6302/C3	ROULEMENT 6302/C3	LAGER 6302/C3	COJINETE 6302/C3
	3	70090196	1	CUSCINETTO 62/22	BEARING 62/22	ROULEMENT 62/22	LAGER 62/22	COJINETE 62/22
	4	70090197	1	CUSCINETTO 60/22/18	BEARING 60/22/18	ROULEMENT 60/22/18	LAGER 60/22/18	COJINETE 60/22/18
	5	72060012	2	BUSSOLA Ø10x14	DOWEL PIN Ø10x14	DOUILLE Ø10x14	BUCHSE Ø10x14	CASQUILLO Ø10x14
	6	72010392	2	VITE M6x65	BOLT M6x65	VIS M6x65	SCHRAUBE M6x65	TORNILLO M6x65
	7	72130607	1	GUARNIZIONE COPERCHIO FRIZIONE	GASKET	JOINT	DICHTUNG	JUNTA
	8	72010387	7	VITE M6x28	BOLT M6x28	VIS M6x28	SCHRAUBE M6x28	TORNILLO M6x28
	9	72010390	3	VITE M6x45	BOLT M6x45	VIS M6x45	SCHRAUBE M6x45	TORNILLO M6x45
	10	73131479	1	PIASTRA ALBERO PRIMARIO	PLATE INPUT SHAFT	PLAQUE ARBRE PRIMAIRE	PLATTE	PLACA ARBOL PRIMARIO
	11	72011368	2	VITE	BOLT	VIS	SCHRAUBE	TORNILLO
	12	72080066	1	ANELLO DI TENUTA Ø24x35x5	SEALING RING Ø24x35x5	BAGUE D'ETANCHEITE Ø24x35x5	DICHTUNGSRING Ø24x35x5	ANILLO DE ESTANQUEIDAD Ø24x35x5
	13	72110096	1	ANELLO DI TENUTA Ø18x34x5	SEALING RING Ø18x34x5	BAGUE D'ETANCHEITE Ø18x34x5	DICHTUNGSRING Ø18x34x5	ANILLO DE ESTANQUEIDAD Ø18x34x5

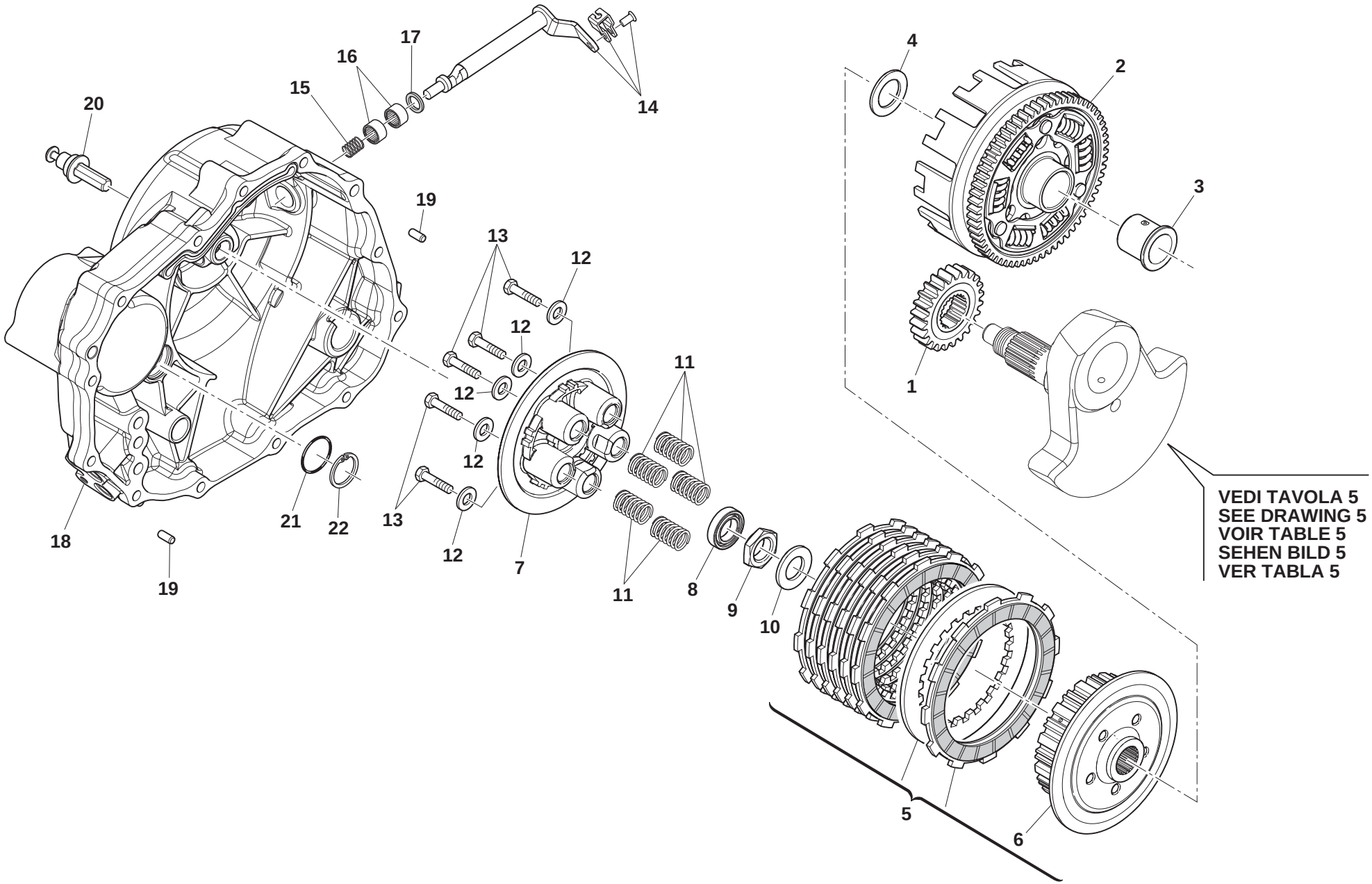
17
16
15
20
14
19
13
12
12
12
12
11
18
21
22
13
12
7
19
11
8
9
10
4
2
3
1
5
6
VEDI TAVOLA 5
SEE DRAWING 5
VOIR TABLE 5
SEHEN BILD 5
VER TABLA 5

FRIZIONE - CLUTCH
EMBRAYAGE - KUPPLUNG
EMBRAGUE

TAVOLA
DRAWING
TABLE
BILD
TABLA

11

Note Notes Notes Marke Notas	Pos. No. N. Index Pos.	N. Cod. Code No. Nr. Code Code Nr N. Cod.	Q.tà Q.ty Q.te M.ge C.ad	DENOMINAZIONE	NAME	DESIGNATION	BESHREIBUNG	DENOMINACION
	1	24020044	1	INGR. CONDUTTORE PRIMARIA	PRIMARY DRIVE GEAR	ENGRENAGE CONDUCTEUR	ANTRIEBSZAHNRAD	ENGRANAJE CONDUCTOR
	2	24120157	1	INGR. CONDOTTO TRASM. PRIMARIA	DRIVEN GEAR, ASSY	ENGRENAGE CONDUIT	ANGETRIEBENES ZAHNRAD	ENGRANAJE CONDUCIDO
	3	24070261	1	BUSSOLA FRIZIONE Ø22x28x29.3	CLUTCH BUSH Ø22x28x29.3	DOUILLE Ø22x28x29.3	BUCHSE Ø22x28x29.3	CASQUILLO Ø22x28x29.3
	4	24070204	1	ROSETTA Ø22x35x2	WASHER Ø22x35x2	RONDELLE Ø22x35x2	UNTERLEGSCHEIBE Ø22x35x2	ARANDELA Ø22x35x2
	5	24120104	1	MOZZO PORTADISCHI	CLUTCH HUB	MOYEU PORTE-DISQUES	SCHEIBENNABE	CUBO PORTADISCOS
	6	24070251	1	MOZZO	HUB	MOYEU	NABE	CUBO
	7	24070256	1	PIATTO SPINGIDISCO	PUSH DISC PLATE	PLAQUE PRESSE-DISQUE	KUPPLUNGS-DRUCKPLATTE	PLATO PRESION DISCO
	8	24070205	1	CUSCINETTO 61903/P6	BEARING 61903/P6	ROULEMENT 61903/P6	LAGER 61903/P6	COJINETE 61903/P6
	9	24070163	1	DADO M18x1	NUT M18x1	ECROU M18x1	MUTTER M18x1	TUERCA M18x1
	10	72040222	1	RONDELLA	WASHER	RONDELLE	UNTERLEGSCHEIBE	ARANDELA
	11	24070255	5	MOLLA PER FRIZIONE	CLUTCH SPRING	RESSORT POUR EMBRAYAGE	KUPPLUNGSFEDER	MUELLE PARA EMBRAGUE
	12	72040197	5	ROSETTA	WASHER	RONDELLE	UNTERLEGSCHEIBE	ARANDELA
	13	72010097	5	VITE M6x35	SCREW M6x35	VIS M6x35	SCHRAUBE M6x35	TORNILLO M6x35
	14	24030031	1	LEVA DISINNESTO FRIZIONE	CLUTCH PUSH LEVER	LEVIER DEBRAYAGE	KUPPLUNGSAUSRÜCKSTANGE	PALANCA DESACOPL.EMBRAGUE
	15	72120084	1	MOLLA LEVA DISINNESTO FRIZIONE	CLUTCH CONTROL ROD SPRING	RESSORT	FEDER	MUELLE
	16	70090016	2	CUSCINETTO HK1210	ROLLING NEEDLE HK1210	ROULEMENT HK1210	LAGER HK1210	COJINETE HK1210
	17	72110098	1	GUARNIZIONE	GASKET	JOINT	DICHTUNG	JUNTA
	18	13011908	1	COPERCHIO FRIZIONE	CLUTCH COVER	COUVERCLE D'EMBRAYAGE	KUPPLUNGSDECKEL	TAPA EMBRAGUE
	19	72060012	2	BUSSOLA Ø10x14	BUSHING Ø10x14	DOUILLE Ø10x14	BUCHSE Ø10x14	CASQUILLO Ø10x14
	20	24070295	1	ASTA DISINNESTO FRIZIONE	CLUTCH PUSHROD	TIGE DEBRAYAGE	KUPPLUNGSAUSRÜCKSTANGE	VARILLA DESACOPLAMIENTO EMBRAGUE
	21	72110097	1	ANELLO DI TENUTA Ø14x22x5	SEALING RING Ø14x22x5	BAGUE D'ETANCHEITE Ø14x22x5	DICHTUNGSRING Ø14x22x5	ANILLO DE ESTANQUEIDAD Ø14x22x5
	22	72080066	1	ANELLO DI FERMO INTERNO	INNER RETAINING RING	BAGUE D'ARRET	SICHERUNGSRING	ANILLO DE RETENCION

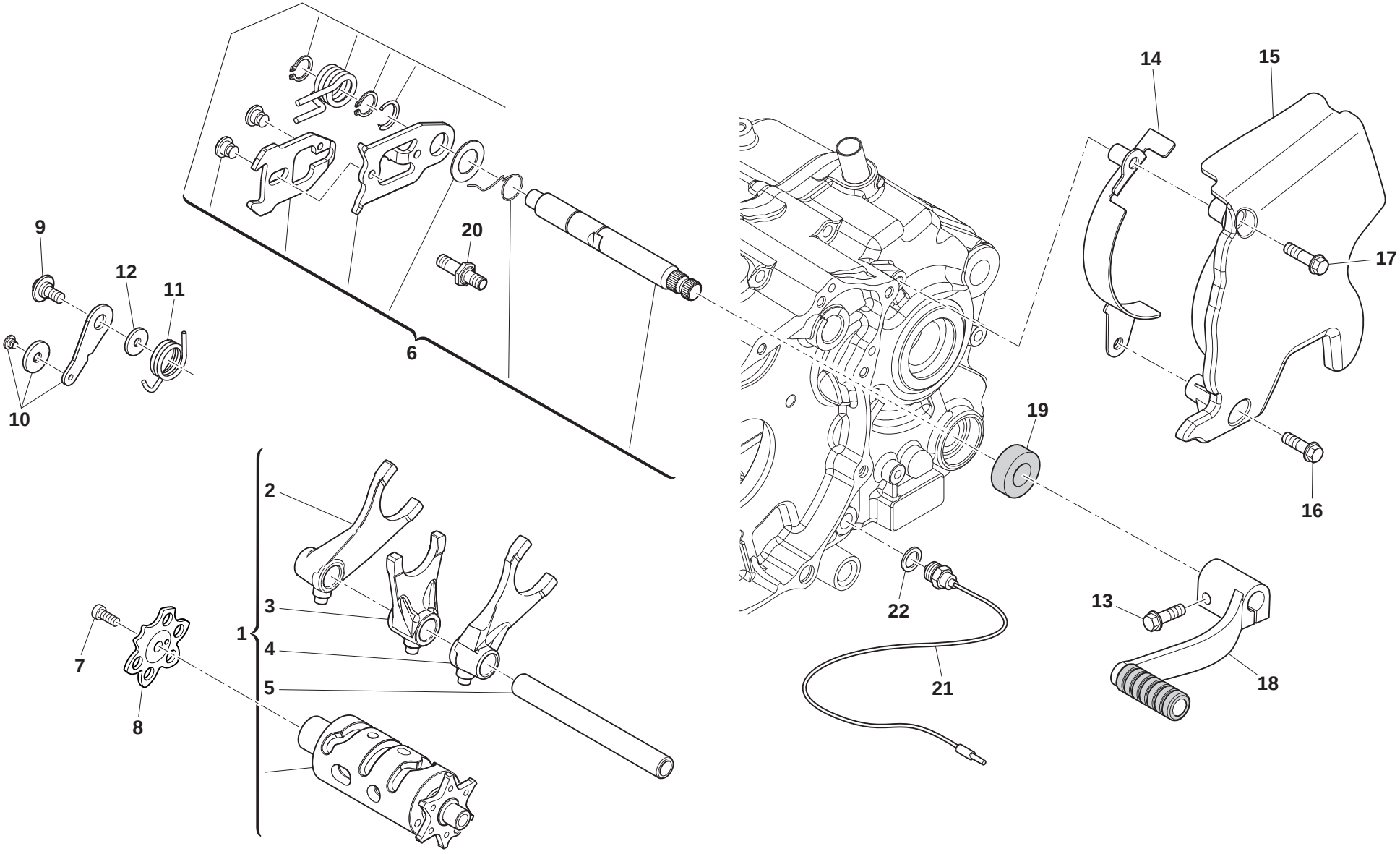
9
12
11
10
6
20
14
15
17
16
19
22
21
13
18
2
3
1
4
5
7
8

COMANDO CAMBIO - GEARSHIFT MECHANISM
COMMANDE DE VITESSE - GANGSCHALTUNG
MANDO CAMBIO

Note Notes Notes Marke Notas	Pos. No. N. Index Pos.	N. Cod. Code No. Nr. Code Code Nr N. Cod.	Q.tà Q.ty Q.te M.ge C.ad	DENOMINAZIONE	NAME	DESIGNATION	BESHREIBUNG	DENOMINACION
	1	15050043	1	ASS. TAMBURO SELETTORE MARCE	GEAR SELECTOR DRUM, ASSY	TAMBOUR SELECTEUR DE VITESSES COMPL.	SCHALTWALZE	TAMBOR SELECTOR MARCHAS
	2	15140017	1	FORCELLA CAMBIO (1ª)	GEARBOX FORK (1ST)	FOURCHE BOÎTE DE VITESSES (1ERE)	SCHALTGABEL 1.	HORQUILLA CAMBIO (1ª)
	3	15140018	1	FORCELLA CAMBIO (2ª)	GEARBOX FORK (2ND)	FOURCHE BOÎTE DE VITESSES (2EME)	SCHALTGABEL 2.	HORQUILLA CAMBIO (2ª)
	4	15140019	1	FORCELLA CAMBIO (3ª)	GEARBOX FORK (3RD)	FOURCHE BOÎTE DE VITESSES (3EME)	SCHALTGABEL 3.	HORQUILLA CAMBIO (3ª)
	5	15140020	1	PERNO FORCHETTE	AXES, FORKS	AXE FOURCHE	BOLZEN	EJE HORQUILLA
	6	15070043	1	SELETTORE CAMBIO	GEAR SHIFT SPINDLE, ASSY	SELECTEUR COMPL.	ZUSAMMENBAU SCHALTWALZE	CONJUNTO SELECTOR
	7	72011370	1	VITE PIASTRA FORCELLA INNESTO M6x20	BOLT, GEAR SHIFT FORK PLATE M6x20	VIS M6x20	SCHRAUBE M6x20	TORNILLO M6x20
	8	15090009	1	ROCCHETTO SELETTORE	SELECTOR SPROCKET	PIGNON SELECTEUR	SPULE SCHALTWALZE	PINON SELECTOR
	9	72011366	1	VITE M6x16	BOLT M6x16	VIS M6x16	SCHRAUBE M6x16	TORNILLO M6x16
	10	15080015	1	PIASTRINA	PLATE	PLAQUETTE	PLÄTTCHEN	PLACA
	11	72120085	1	MOLLA	SPRING	RESSORT	FEDER	MUELLE
	12	72040167	1	RONDELLA	WASHER	RONDELLE	UNTERLEGSCHEIBE	ARANDELA
	13	Z00062728	1	VITE TEF M6x20	FLANGED EXAGON HEAD SCREW M6x20	VIS M6x20	SCHRAUBE M6x20	TORNILLO M6x20
	14	F000P00870	1	GUIDACATENA LATO PIGNONE	DRIVE CHAIN	GUIDE DE CHAÎNE	KETTENFÜHRUNG	GUÍA CADENA
	15	14021193	1	COPERCHIO PIGNONE CATENA	CHAIN SPROCKET COVER	COUVERCLE PIGNON CHAÎNE	DECKEL KETTENRITZEL	TAPA PINON CADENA
	16	Z00062730	1	VITE TEF M6x30	FLANGED EXAGON HEAD SCREW M6x30	VIS M6x30	SCHRAUBE M6x30	TORNILLO M6x30
	17	ZE0067545	1	VITE TEF M6x40	BOLT M6x40	VIS M6x40	SCHRAUBE M6x40	TORNILLO M6x40
	18	F000A00515	1	ASS. LEVA COMANDO CAMBIO	GEAR CONTROL LEVER ASSY	LEVIER DE COM. BOÎTE DE VITESSES	ZSB. SCHALTHEBEL	CONJ. PALANCA MANDO CAMBIO
	19	72110009	1	ANELLO DI TENUTA OLIO Ø14x28x7	SEALING RING Ø14x28x7	BAGUE D'ETANCHEITE Ø14x28x7	DICHTUNGSRING Ø14x28x7	ANILLO DE ESTANQUEIDAD Ø14x28x7
	20	72011363	1	VITE SELETTORE CAMBIO M8x41	GEARSHIFT POSITIONING BOLT	VIS M8x41	SCHRAUBE M8x41	TORNILLO M8x41
	21	11040153	1	SENSORE FOLLE	NEUTRAL POSITION SWITCH	CAPTEUR POINT MORT	LEERLAUFSENSOR	SENSOR PUNTO MUERTO
	22	72040362	1	ROSETTA IN RAME	COPPER WASHER	RONDELLE	UNTERLEGSCHEIBE	ARANDELA

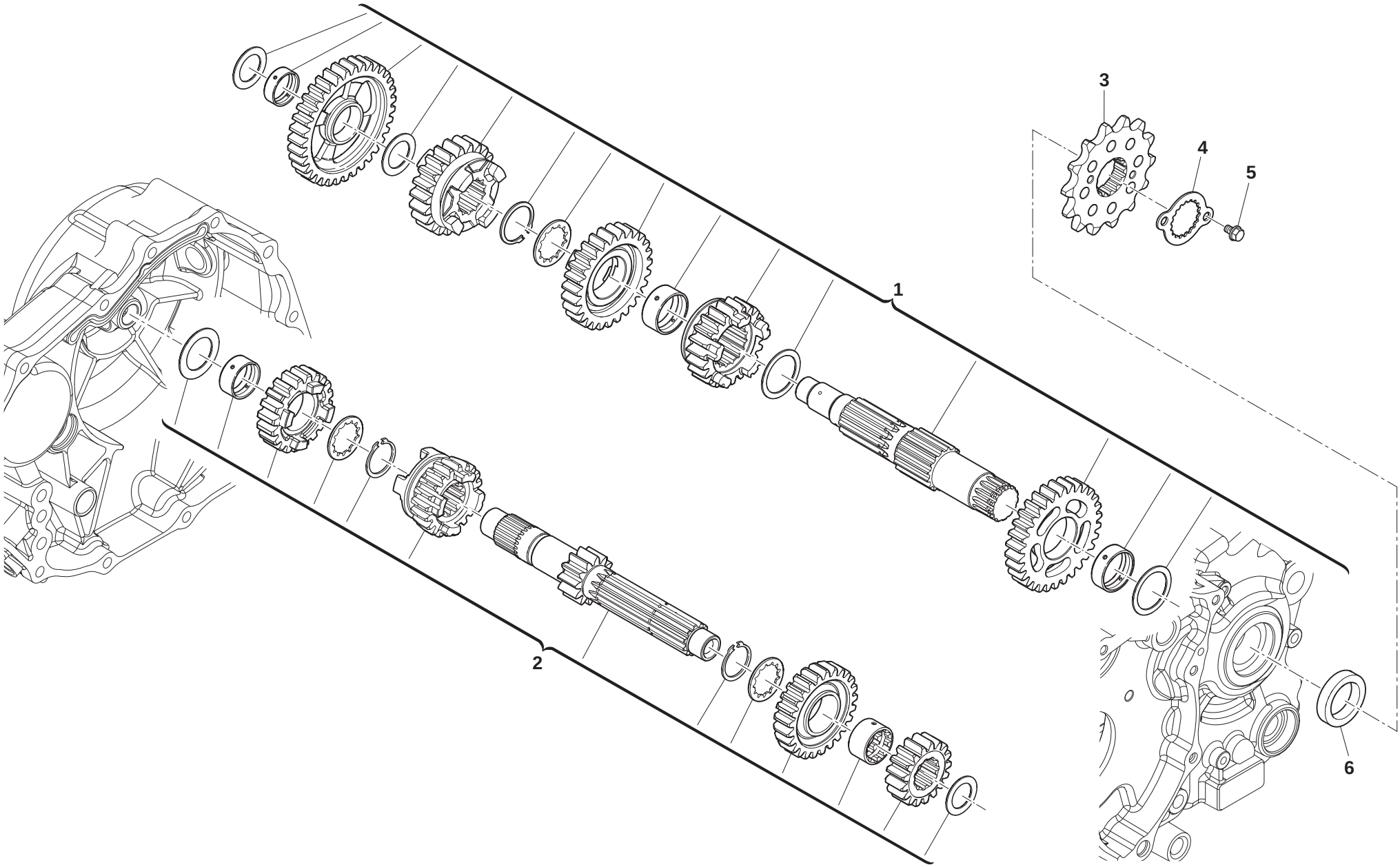
1
2
3
4
5
6

TRASMISSIONE PRIMARIA - PRIMARY DRIVE
TRANSMISSION PRIMAIRE - PRIMÄRÜBERSETZUNG
TRANSMISION PRIMARIA

TAVOLA
DRAWING
TABLE
BILD
TABLA
13

Note Notes Notes Marke Notas	Pos. No. N. Index Pos.	N. Cod. Code No. Nr. Code Code Nr N. Cod.	Q.tà Q.ty Q.te M.ge C.ad	DENOMINAZIONE	NAME	DESIGNATION	BESHREIBUNG	DENOMINACION
	1	15020081	1	ASSIEME ALBERO PRIMARIO	INPUT SHAFT ASSY	ARBRE PRIMAIRE COMPL.	ZUSAMMENBAU HAUPTANTRIEBSWELLE	CONJUNTO ARBOL PRIMARIO
	2	15030105	1	ASSIEME ALBERO SECONDARIO	OUTPUT SHAFT ASSY	ARBRE SECONDAIRE COMPL.	ZUSAMMENBAU VORGELEGEWELLE	CONJUNTO ARBOL SECUNDARIO
	3	15170066	1	PIGNONE USCITA CAMBIO Z=15	TRANSMISSION SPROCKET T=15	PIGNON SORTIE BOÎTE DE VITESSES Z=15	GETRIEBE-AUSGANGSRITZEL Z=15	PINON SALIDA CAMBIO Z=15
	4	73131476	1	PIASTRA FISSAGGIO PIGNONE	PINION FIXING BRACKET	PLAQUE PIGNON	RITZELPLATTE	PLACA PINON
	5	72011365	2	VITE M6x12	SCREW M6x12	VIS M6x12	SCHRAUBE M6x12	TORNILLO M6x12
	6	72110095	1	PARAOLIO Ø25x35x5	OIL SEAL Ø25x35x5	JOINT PARE-HUILE Ø25x35x5	ÖLDICHTRING Ø25x35x5	RETÉN DE ACEITE Ø25x35x5

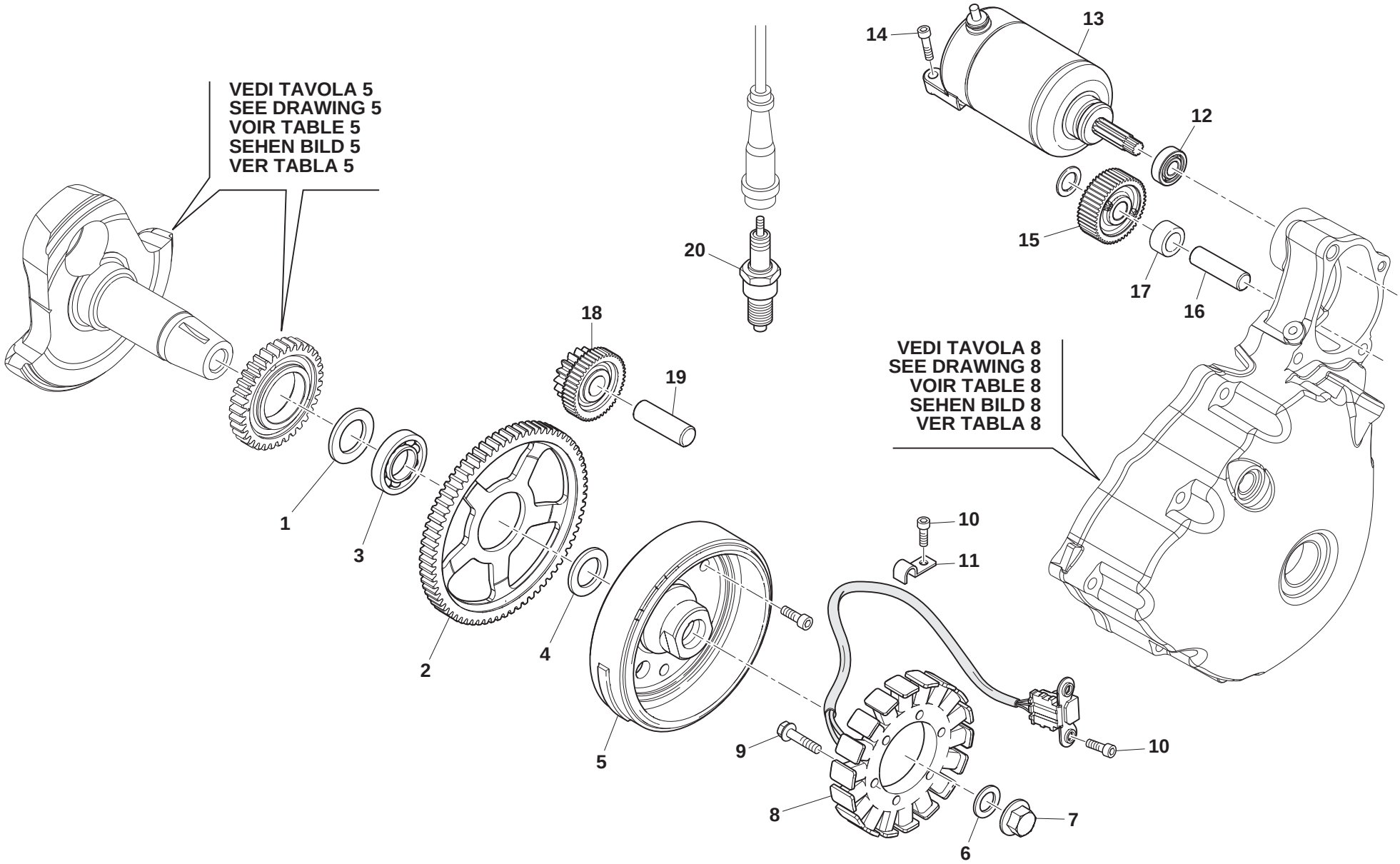
VEDI TAVOLA 5
SEE DRAWING 5
VOIR TABLE 5
SEHEN BILD 5
VER TABLA 5
VEDI TAVOLA 8
SEE DRAWING 8
VOIR TABLE 8
SEHEN BILD 8
VER TABLA 8
1
2
3
4
5
6
7
8
9
10
11
12
13
14
15
16
17
18
19
20

PARTE ELETTRICA - IGNITION SYSTEM
PARTIES ELECTRIQUE - ELEKTRISCHE TEILE
PARTE ELECTRICA

TAVOLA
DRAWING
TABLE
BILD
TABLA
14

Note Notes Notes Marke Notas	Pos. No. N. Index Pos.	N. Cod. Code No. Nr. Code Code Nr N. Cod.	Q.tà Q.ty Q.te M.ge C.ad	DENOMINAZIONE	NAME	DESIGNATION	BESHREIBUNG	DENOMINACION
	1	72040358	1	ROSETTA Ø30x42x5.7	WASHER Ø30x42x5.7	RONDELLE Ø30x42x5.7	UNTERLEGSCHEIBE Ø30x42x5.7	ARANDELA Ø30x42x5.7
	2	15110018	1	INGR. FRIZIONE AVVIAMENTO	STARTING CLUTCH GEARS	PIGNON	ZAHNRAD	ENGRANAJE
	3	70090092	1	CUSCINETTO DOPPIO Ø30x35x26	DOUBLE-NEEDLE Ø30x35x26	ROULEMENT Ø30x35x26	LAGER Ø30x35x26	COJINETE Ø30x35x26
	4	72040359	1	ROSETTA Ø29.2x38.5x3.7	WASHER Ø29.2x38.5x3.7	RONDELLE Ø29.2x38.5x3.7	UNTERLEGSCHEIBE Ø29.2x38.5x3.7	ARANDELA Ø29.2x38.5x3.7
	5	31150138	1	ROTORE ACCENSIONE	ROTOR, MAGNETO	ROTOR	ROTOR	ROTORE
	6	72040360	1	ROSETTA Ø12.6x30x5	WASHER Ø12.6x30x5	RONDELLE Ø12.6x30x5	UNTERLEGSCHEIBE Ø12.6x30x5	ARANDELA Ø12.6x30x5
	7	72011367	1	DADO	NUT M12x1.25	ECROU M12x1.25	MUTTER M12x1.25	TUERCA M12x1.25
	8	31140136	1	ASSIEME STATORE	STATOR ASSY	STATOR COMPLET	STATOR KOMPLETT	ESTATOR COMPLETO
	9	72010388	3	VITE M6x32	BOLT M6x32	VIS M6x32	SCHRAUBE M6x32	TORNILLO M6x32
	10	72010157	3	VITE M6x16	BOLT M6x16	VIS M6x16	SCHRAUBE M6x16	TORNILLO M6x16
	11	73131478	1	PIASTRINA	NIP PRESS LINE	PLAQUETTE	PLÄTTCHEN	PLACA
	12	70090200	1	CUSCINETTO 6000 Ø10x26x8	BEARING 6000 Ø10x26x8	ROULEMENT 6000 Ø10x26x8	LAGER 6000 Ø10x26x8	COJINETE 6000 Ø10x26x8
	13	31160417	1	MOTORINO AVVIAMENTO	STARTER MOTOR	DEMARREUR ELECTRIQUE	ANLASSERMOTOR	MOTOR DE ARRANQUE
	14	72010163	2	VITE M6x25	BOLT M6x25	VIS M6x25	SCHRAUBE M6x25	TORNILLO M6x25
	15	15110020	1	INGRANAGGIO Z=45	GEAR T=45	PIGNON Z=45	ZAHNRAD Z=45	ENGRANAJE Z=45
	16	24080011	1	ALBERO INGRANAGGIO AVVIAMENTO	KICK STARTER SHAFT	ARBRE DE DEMARRAGE	KICKSTARTERWELLE	EJE ARRANQUE
	17	24080012	1	BUSSOLA INGRANAGGIO AVVIAMENTO	BUSH, GEAR SHAFT	DOUILLE	BUCHSE	CASQUILLO
	18	15110019	1	INGRANAGGIO DOPPIO Z=16/47	DUAL GEAR T=16/47	PIGNON Z=16/47	ZAHNRAD Z=16/47	ENGRANAJE Z=16/47
	19	24080010	1	PERNO	PIN	AXE	BOLZEN	EJE
	20	31170020	1	CANDELA NGK DPR8Z	SPARK PLUG NGK DPR8Z	BOUGIE NGK DPR8Z	ZÜNDKERZE NGK DPR8Z	BUJÍA NGK DPR8Z

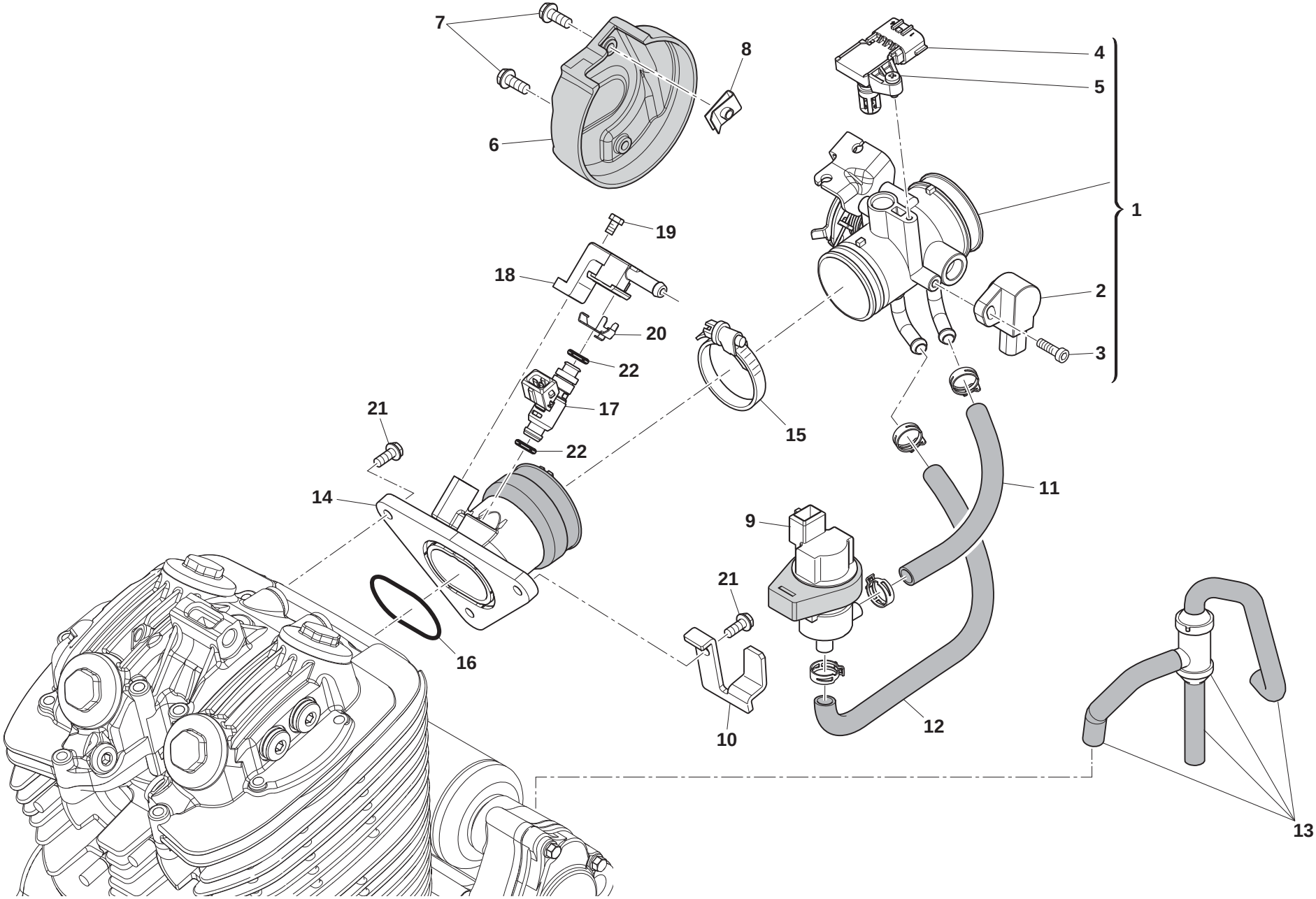
7
8
6
4
5
1
19
18
2
20
3
22
21
17
15
22
14
11
9
21
16
10
12
13

CORPO FARFALLATO - THROTTLE BODY
CORP PAPILLON - DROSSELKLAPPENKÖRPER
CUERPO OSCILANTE

Note Notes Notes Marke Notas	Pos. No. N. Index Pos.	N. Cod. Code No. Nr. Code Code Nr N. Cod.	Q.tà Q.ty Q.te M.ge C.ad	DENOMINAZIONE	NAME	DESIGNATION	BESHREIBUNG	DENOMINACION
	1	F000A00853	1	ASSIEME CORPO FARFALLATO	THROTTLE BODY ASSY	CORPS À PAPILLONS	DROSSELKÖRPER	CUERPO MARIPOSA
	2	31350080	1	SENSORE DI POSIZIONE	POSITION SENSOR	CAPTEUR	SENSOR	SENSOR
	3	72030657	1	VITE TCIC M4x16	SCREW M4x16	VIS M4x16	SCHRAUBE M4x16	TORNILLO M4x16
	4	31350057	1	SENSORE DI PRESSIONE	PRESSURE SENSOR	CAPTEUR DE PRESSION	DRUCKSENSOR	SENSOR PRESIÓN
	5	72030078	1	VITE TEF M5x12	FLANGED EXAGON HEAD SCREW M5x12	BOULON DE BRIDE M5x12	FLANSCHENSCHRAUBE M5x12	TORNILLO DE REBORDE M5x12
	6	F000P00855	1	COPERCHIO	COVER	COUVERCLE	DECKEL	TAPA
	7	Z00067997	2	VITE TEF M5x12	FLANGED EXAGON HEAD SCREW M5x12	BOULON DE BRIDE M5x12	FLANSCHENSCHRAUBE M5x12	TORNILLO DE REBORDE M5x12
	8	8000H2168	1	DADO A GRAFFETTA M5	CLIP NUT M5	ECROU À AGRAFE M5	SICHERUNGSMUTTER M5	TUERCA DE CLIP M5
	9	31350058	1	VALVOLA SOLENOIDE	SOLENOID VALVE	VANNE À SOLÉNOÏDE	MAGNETVENTIL	VÁLVULA SOLENOIDE
	10	73032134	1	SUPPORTO VALVOLA SOLENOIDE	SOLENOID VALVE BRACKET	SUPPORT	HALTERUNG	SOPORTE
	11	73090282	1	TUBO INGRESSO	INTAKE HOSE	TUYAU DE REFOULEMENT	VORLAUFROHR	TUBO ALIMENTACIÓN
	12	73090283	1	TUBO USCITA	OUTLET HOSE	TUYAU DE SORTIE	ANSCHLUSSROHR	TUBO SALIDA
	13	18050094	1	VALVOLA BLOW-BY CON TUBI FASCETTE E TAPPO	FUEL AND VAPOR SEPARATOR + CLIPS AND CAP	VANNE BLOW-BY	BLOW-BY VENTIL	VÁLVULA BLOW-BY
	14	F000P00849	1	COLLETTORE ASPIRSAZIONE	INTAKE MANIFOLD	COLLECTEUR ADMISSION	KRÜMMER EINLASS	COLECTOR ADMISIÓN
	15	18170097	1	FASCETTA TJBC 40-60	CLIP TJBC 40-60	COLLIER TJBC 40-60	SCHELLE TJBC 40-60	ABRAZADERA TJBC 40-60
	16	72150219	1	ANELLO OR	O-RING	JOINT TORIQUE	O-RING	JUNTA TORICA
	17	F000P00850	1	INIETTORE	INJECTOR	INJECTEUR	EINSPRITZDÜSE	INYECTOR
	18	F000P00851	1	CAPPUCCIO INIETTORE	INJECTOR CAP	CAPUCHON	KAPPE	CAPUCHÓN
	19	Z00062726	1	VITE TEF M6x14	FLANGED EXAGON HEAD SCREW M6x14	BOULON DE BRIDE M6x14	FLANSCHENSCHRAUBE M6x14	TORNILLO DE REBORDE M6x14
	20	F000P00852	1	FASCETTA	CLIP	COLLIER	SCHELLE	ABRAZADERA
	21	Z00062729	3	VITE TEF M6x25	FLANGED EXAGON HEAD SCREW M6x25	BOULON DE BRIDE M6x25	FLANSCHENSCHRAUBE M6x25	TORNILLO DE REBORDE M6x25
	22	F000P01472	2	ANELLO OR	O-RING	JOINT TORIQUE	O-RING	JUNTA TORICA

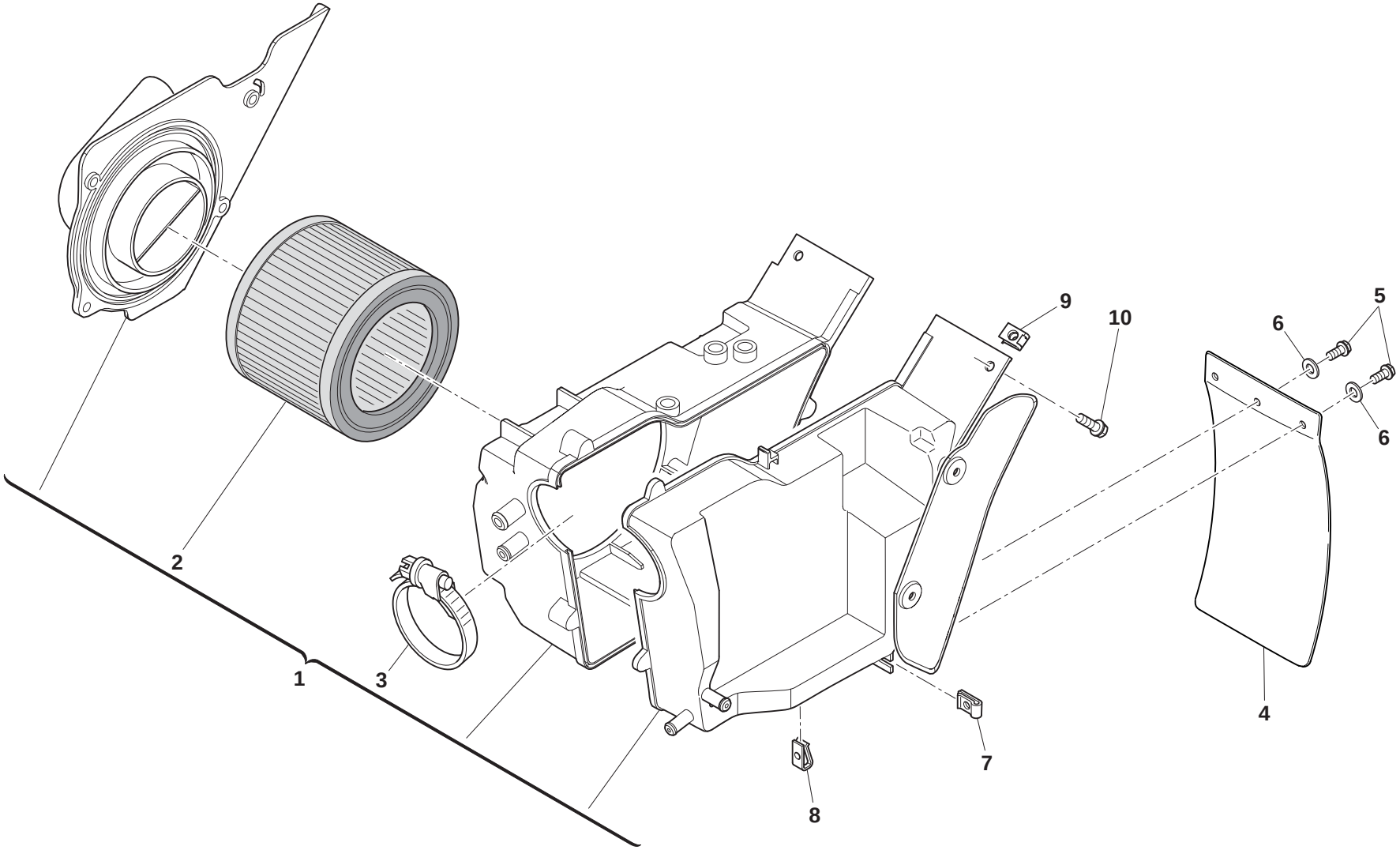
1
2
3
4
5
6
6
7
8
9
10

FILTRO ARIA - AIR FILTER
FILTRE AIRE - LUFTFILTER
FILTRO DE AIRE

TAVOLA
DRAWING
TABLE
BILD
TABLA
16

Note Notes Notes Marke Notas	Pos. No. N. Index Pos.	N. Cod. Code No. Nr. Code Code Nr N. Cod.	Q.tà Q.ty Q.te M.ge C.ad	DENOMINAZIONE	NAME	DESIGNATION	BESHREIBUNG	DENOMINACION
	1	F000A00777	1	SCATOLA FILTRO ARIA	AIR FILTER BOX	BOÎTIER DE FILTRE À AIR	LUFTFILTERGEHÄUSE	CAJA FILTRO AIRE
	2	18130045	1	FILTRO ARIA	AIR FILTER	FILTRE À AIR	LUFTFILTER	FILTRO AIRE
	3	18170097	1	FASCETTA METALLICA TJBC 40-60	METALLIC CLIP TJBC 40-60	COLLIERT JBC 40-60	SCHELLE TJBC 40-60	ABRAZADERA TJBC 40-60
	4	73021054	1	PARASPRUZZI	INTERNAL REAR MUDGUARD	GARDE-BOUE ARRIÈRE INTÉRIEUR	HINTERRADKOTFLÜGEL INNEN	GUARDABARROS TRASERO INTERNO
	5	Z00067997	3	VITE TEF M5x12	FLANGED EXAGON HEAD SCREW M5x12	BOULON DE BRIDE M5x12	FLANSCHENSCHRAUBE M5x12	TORNILLO DE REBORDE M5x12
	6	62ND15548	3	ROSETTA	WASHER	RONDELLE	UNTERLEGSCHEIBE	ARANDELA
	7	U00055134	2	DADO A GRAFFETTA M5	CLIP NUT M5	ECROU À AGRAFE M5	SICHERUNGSMUTTER M5	TUERCA DE CLIP M5
	8	8000H2168	1	DADO A GRAFFETTA M5	CLIP NUT M5	ECROU À AGRAFE M5	SICHERUNGSMUTTER M5	TUERCA DE CLIP M5
	9	U00046893	2	DADO A GRAFFETTA M6	CLIP NUT M6	ECROU À AGRAFE M6	SICHERUNGSMUTTER M6	TUERCA DE CLIP M6
	10	Z00062727	2	VITE TEF M6x16	FLANGED EXAGON HEAD SCREW M6x16	BOULON DE BRIDE M6x16	FLANSCHENSCHRAUBE M6x16	TORNILLO DE REBORDE M6x16

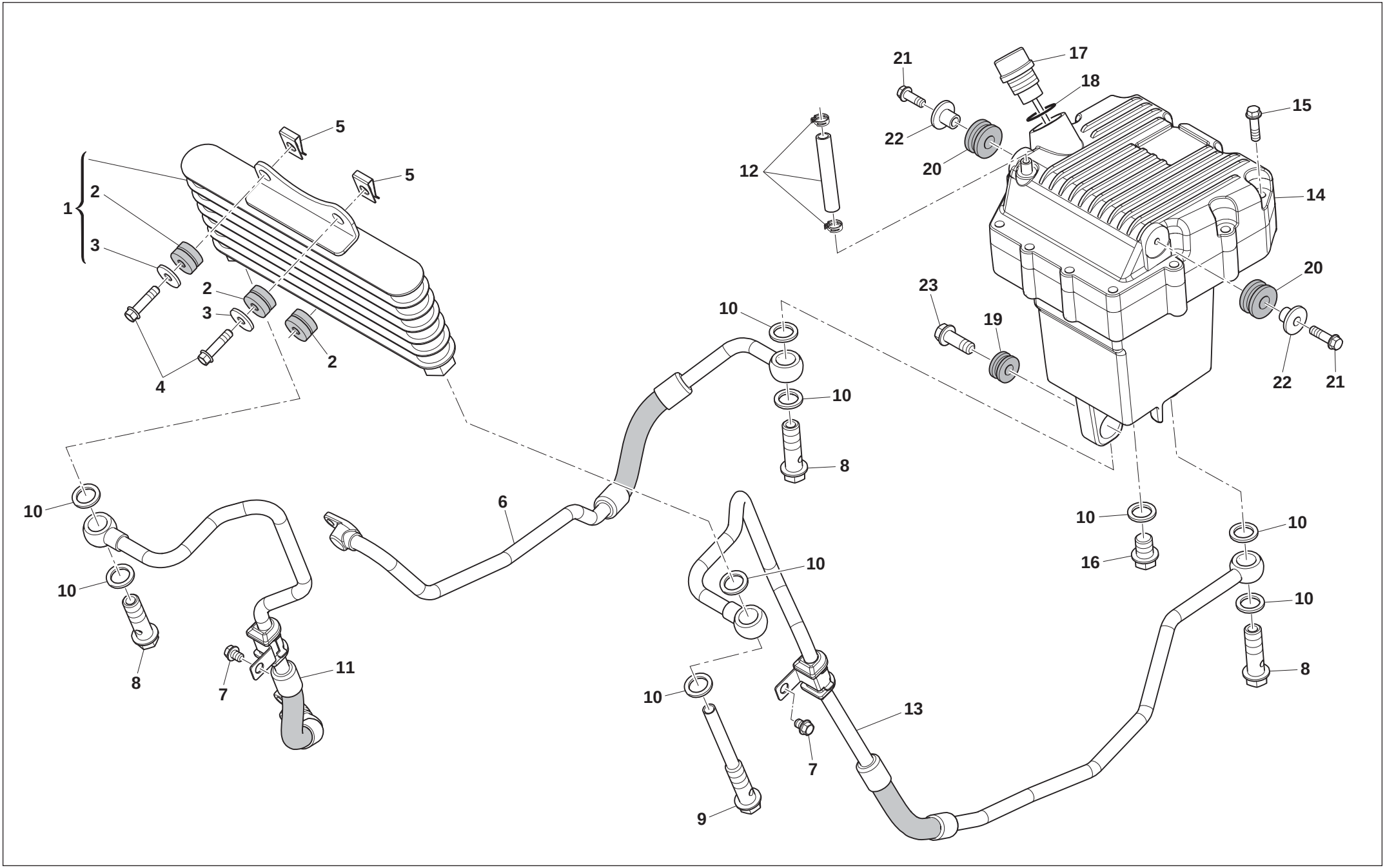
1
2
3
4
5
6
7
8
9
10
11
12
13
14
15
16
17
18
19
20
21
22
23

IMPIANTO DI RAFFREDDAMENTO OLIO - OIL COOLING SYSTEM
INSTALLATION DE REFROIDISSEMENT HUILE - ÖL SCHMIERUNGSSYSTEM
EQUIPO DE ENFRIAMENTO ACEITE

Note Notes Notes Marke Notas	Pos. No. N. Index Pos.	N. Cod. Code No. Nr. Code Code Nr N. Cod.	Q.tà Q.ty Q.te M.ge C.ad	DENOMINAZIONE	NAME	DESIGNATION	BESHREIBUNG	DENOMINACION
	1	F000A00447	1	RADIATORE OLIO COMPLETO	OIL COOLER ASSY	RADIATEUR HUILE COMPLET	ÖLKÜHLER KOMPLETT	RADIADOR ACEITE COMPLETO
	2	F000P00774	3	GOMMINO RADIATORE OLIO	OIL COOLER RUBBER	JOINT EN CAOUTCHOUC	GUMMISCHEIBE	GOMA
	3	F000P00775	2	DISTANZIALE	SPACER	ENTRETOISE	ABSTANDHALTER	DISTANCIADOR
	4	Z00062729	2	VITE TEF M6x25	FLANGED EXAGON HEAD SCREW M6x25	BOULON DE BRIDE M6x25	FLANSCHENSCHRAUBE M6x25	TORNILLO DE REBORDE M6x25
	5	U00046893	2	DADO A GRAFFETTA M6	CLIP NUT M6	ECROU À AGRAFE M6	SICHERUNGSMUTTER M6	TUERCA DE CLIP M6
	6	F000P00452	1	TUBO SERBATOIO-MOTORE	OIL PIPE TANK-ENGINE	TUBE RÉSERVOIR-MOTEUR	ROHR TANK-MOTOR	TUBO DEPÓSITO-MOTOR
	7	ZS0067545	2	VITE TEF M6x8	FLANGED EXAGON HEAD SCREW M6x8	BOULON DE BRIDE M6x8	FLANSCHENSCHRAUBE M6x8	TORNILLO DE REBORDE M6x8
	8	72012140	3	VITE FORATA M12x1,25x30	LIQUID BOLT M12x1,25x30	VIS M12x1,25x30	SCHRAUBE M12x1,25x30	TORNILLO M12x1,25x30
	9	F000P00742	1	VITE FORATA SPECIALE	SPECIAL LIQUID BOLT	VIS SPÉCIAUX	SPEZIALSCHRAUBE	TORNILLO ESPECIAL
	10	72040159	9	ROSETTA DI TENUTA	SEALING WASHER	RONDELLE D'ETANCHEITE	DICHTUNGSSCHEIBE	ARANDELA DE ESTANQUEIDAD
	11	F000A00843	1	TUBO MOTORE-RADIATORE	PIPE ENGINE-TANK	TUBE MOTEUR-RÉSERVOIR	ROHR MOTOR-TANK	TUBO MOTOR-DEPÓSITO
	12	17060151	1	TUBO TESTA-SERBATOIO CON CLIPS	CYLINDER HEAD-OIL TANK HOSE WITH CLIPS	TUBE MOTEUR-RÉSERVOIR	ROHR MOTOR-TANK	TUBO MOTOR-DEPÓSITO
	13	F000A00844	1	TUBO RADIATORE-SERBATOIO	OIL PIPE COOLER-TANK	TUBE RADIATEUR-RÉSERVOIR	ROHR ÖLKÜHLER-TANK	TUBO RADIADOR-DEPÓSITO
	14	M000A00643	1	ASS. SERBATOIO OLIO	OIL TANK ASSY	RÉSERVOIR D'HUILE COMPLET	ÖLBEHÄLTER KOMPLETT	DEPÓSITO ACEITE COMPLETO
	15	72010387	12	VITE TEF M6x28	FLANGED EXAGON HEAD SCREW M6x28	BOULON DE BRIDE M6x28	FLANSCHENSCHRAUBE M6x28	TORNILLO DE REBORDE M6x28
	16	72012089	1	TAPPO OLIO INFERIORE	LOWER OIL CAP	BOUCHON	STOPFEN	TAPON
	17	73010172	1	TAPPO OLIO	OIL CAP	BOUCHON	STOPFEN	TAPON
	18	72150018	1	ANELLO OR	OIL CAP O-RING	JOINT TORIQUE	O-RING	JUNTA TORICA
	19	73012333	2	SILENT-BLOCK	SILENT-BLOCK	SILENT-BLOCK	SILENT-BLOCK	SILENT-BLOCK
	20	73012321	2	GOMMINO	RUBBER RING	JOINT EN CAOUTCHOUC	GUMMISCHEIBE	GOMA
	21	Z00062728	2	VITE TEF M6x20	FLANGED EXAGON HEAD SCREW M6x20	BOULON DE BRIDE M6x20	FLANSCHENSCHRAUBE M6x20	TORNILLO DE REBORDE M6x20
	22	72040551	2	BUSSOLA FLANGIATA Ø6,5x18x7	FLANGED BUSH Ø6,5x18x7	DOUILLE À BRIDE Ø6,5x18x7	FLANSCHBUCHSE Ø6,5x18x7	CASQUILLO CON BRIDA Ø6,5x18x7
	23	8A00B1959	1	VITE TEF M8x30	FLANGED EXAGON HEAD SCREW M8x30	BOULON DE BRIDE M8x30	FLANSCHENSCHRAUBE M8x30	TORNILLO DE REBORDE M8x30

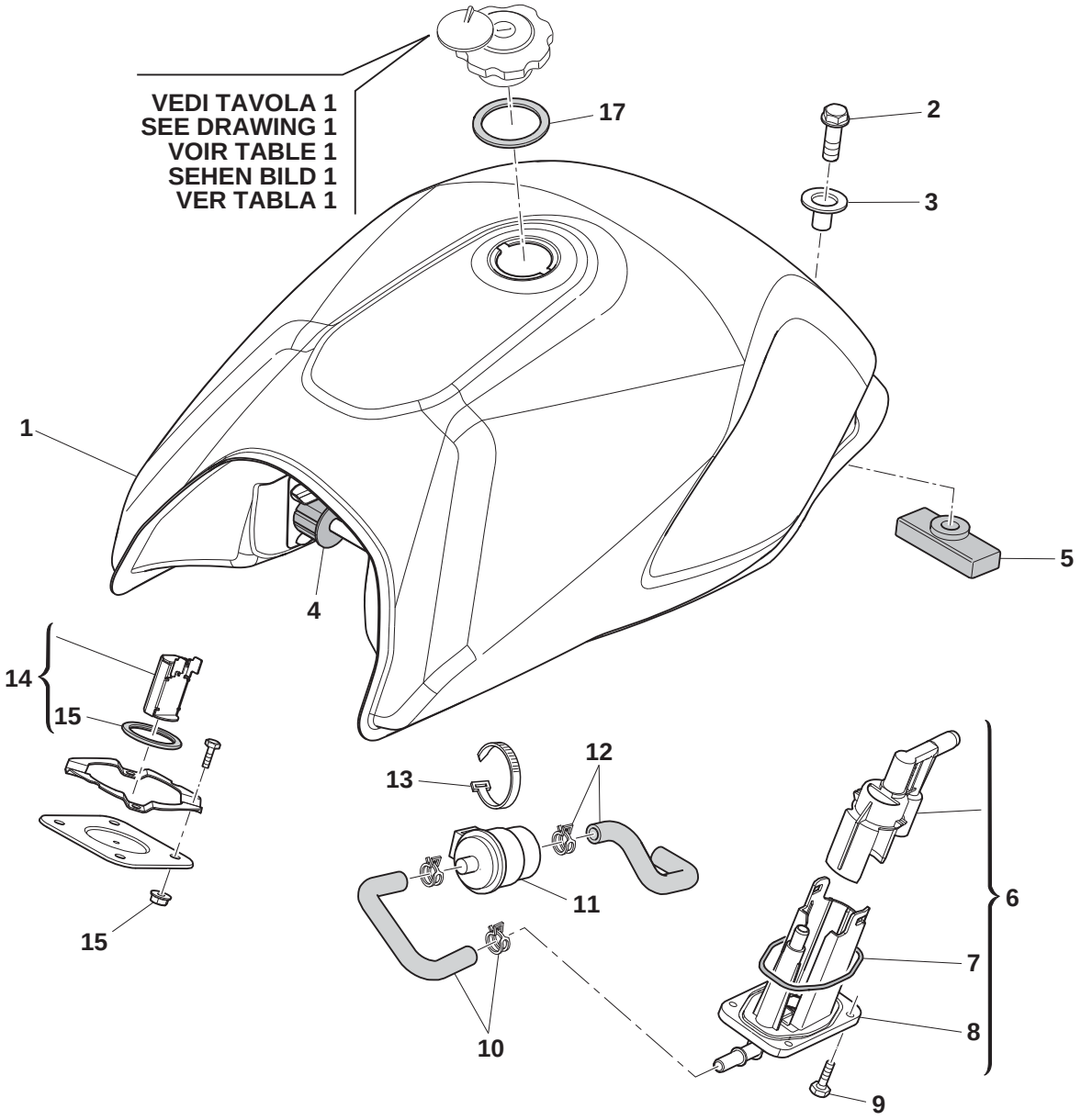
VEDI TAVOLA 1
SEE DRAWING 1
VOIR TABLE 1
SEHEN BILD 1
VER TABLA 1
17
2
3
1
4
5
14
15
15
13
12
11
10
6
7
8
9

SERBATOIO CARBURANTE - FUEL TANK
RESERVOIR CARBURANT - KRAFTSTOFFBEHALTER
DEPOSITO GASOLINA

Note Notes Notes Marke Notas	Pos. No. N. Index Pos.	N. Cod. Code No. Nr. Code Code Nr N. Cod.	Q.tà Q.ty Q.te M.ge C.ad	DENOMINAZIONE	NAME	DESIGNATION	BESHREIBUNG	DENOMINACION
SILVER VASE	1	F000A00295	1	ASS. SERBATOIO CARBURANTE	FUEL TANK ASSY	RÉSERVOIR DE CARBURANT COMPLET	KRAFTSTOFFTANK KOMPLETT	DEPÓSITO COMBUSTIBLE COMPLETO
GRAN TURISMO	1	F0B0A00295	1	ASS. SERBATOIO CARBURANTE	FUEL TANK ASSY	RÉSERVOIR DE CARBURANT COMPLET	KRAFTSTOFFTANK KOMPLETT	DEPÓSITO COMBUSTIBLE COMPLETO
	2	72011245	1	VITE TEF M8x30	FLANGED EXAGON HEAD SCREW M8x30	BOULON DE BRIDE M8x30	FLANSCHENSCHRAUBE M8x30	TORNILLO DE REBORDE M8x30
	3	70120233	1	BUSSOLA	BUSHING	DOUILLE	BUCHSE	CASQUILLO
	4	73012149	2	TAMPONE LATERALE SERBATOIO	FRONT DAMPING MAT	TAMPON LATÉRALE	PUFFER SEITLICH	TACO LATERAL
	5	73012489	1	TAMPONE POSTERIORE SERBATOIO	REAR DAMPING MAT	TAMPON ARRIÈRE	PUFFER HINTEN	TACO TRASERO
	6	31350039	1	POMPA BENZINA	FUEL PUMP	POMPE À CARBURANT	BENZINPUMPE	BOMBA GASOLINA
	7	31350081	1	GUARNIZIONE POMPA BENZINA	FUEL PUMP GASKET	JOINT POMPE DE CARBURANT	DICHTUNG PUMPE	JUNTA BOMBA COMBUSTIBLE
	8	31350083	1	PIASTRA METALLICA	METALLIC PLATE	PLAQUE	PLATTE	PLACA
	9	72030657	4	VITE M4x16	BOLT M4x16	VIS M4x16	SCHRAUBE M4x16	TORNILLO M4x16
	10	F000A00761	1	TUBO MANDATA BENZINA CON CLIPS	PUMP- FUEL FILTER HOSE WITH CLIPS	TUYAU DE REFOULEMENT	VORLAUFROHR	TUBO ALIMENTACIÓN
	11	F000P00915	1	FILTRO BENZINA	FUEL FILTER	FILTRE DE CARBURANT	BENZINFILTER	FILTRO COMBUSTIBLE
	12	F000P00913	1	TUBO FILTRO-INIETTORE CON CLIPS	FUEL FILTER-INJECTOR HOSE WITH CLIPS	TUBE FILTRE-INJECTEUR	ROHR FILTER-EINSPRITZDÜSE	TUBO FILTRO-INYECTOR
	13	F000P00916	1	FASCETTA	CLAMP	COLLIER	SCHELLE	ABRAZADERA
	14	31130115	1	SENSORE LIVELLO BENZINA	FUEL SENDER ASSY	CAPTEUR	SENSOR	SENSOR
	15	31130117	1	GUARNIZIONE	FUEL SENDER GASKET	JOINT	DICHTUNG	JUNTA
	16	72020178	4	DADO M6	NUT M6	ECROU M6	MUTTER M6	TUERCA M6
	17	F000P01566	1	GUARNIZIONE TAPPO	FUEL SENDER GASKET	JOINT	DICHTUNG	JUNTA

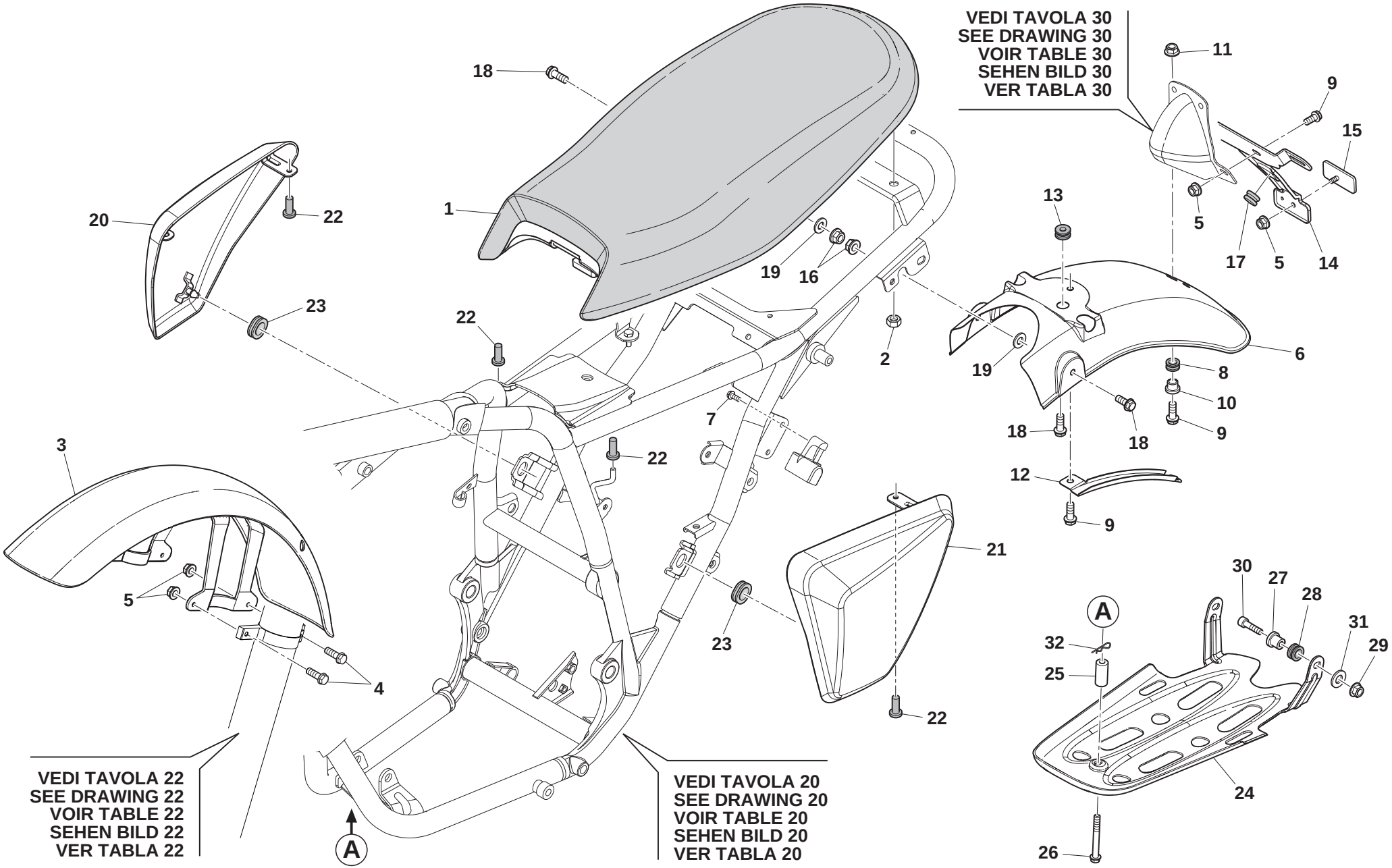
VEDI TAVOLA 30
SEE DRAWING 30
VOIR TABLE 30
SEHEN BILD 30
VER TABLA 30
VEDI TAVOLA 22
SEE DRAWING 22
VOIR TABLE 22
SEHEN BILD 22
VER TABLA 22
VEDI TAVOLA 20
SEE DRAWING 20
VOIR TABLE 20
SEHEN BILD 20
VER TABLA 20
A
1
2
3
4
5
6
7
8
9
10
11
12
13
14
15
16
17
18
19
20
21
22
23
24
25
26
27
28
29
30
31
32

PANNELLI, PARAFANGHI, SELLA - PANEL, FENDERS, SEAT
PANNEAU, GARDE-BOUES, SIEGE - STREIFEN, KOTFLUGEL, SATTEL
PANELO, GUARDABARROS, SILLIN

Note Notes Notes Marke Notas	Pos. No. N. Index Pos.	N. Cod. Code No. Nr. Code Code Nr N. Cod.	Q.tà Q.ty Q.te M.ge C.ad	DENOMINAZIONE	NAME	DESIGNATION	BESHREIBUNG	DENOMINACION
SILVER VASE	1	F000A00453	1	SELLA	SADDLE	SELLE	SITZBANK	ASIENTO
GRAN TURISMO	1	F000A00629	1	SELLA	SADDLE	SELLE	SITZBANK	ASIENTO
	2	Y00043928	2	DADO FRENATO M8x12	SELF-LOCKING NUT M8x12	ECROU AUTOBLOQUANT M8x12	SELBSTSICHERNDE MUTTER M8x12	TUERCA AUTOBLOCANTE M8x12
	3	F000P00284	1	PARAFANGO ANTERIORE	FRONT MUDGUARD	GARDE-BOUE AVANT	VORDERRADKOTFLÜGEL	GUARDABARROS DELANTERO
	4	Z00062728	4	VITE TEF M6x20	FLANGED EXAGON HEAD SCREW M6x20	BOULON DE BRIDE M6x20	FLANSCHENSCHRAUBE M6x20	TORNILLO DE REBORDE M6x20
	5	Z00044240	7	DADO AUTOBLOCCANTE M6	SELF-LOCKING NUT M6	ECROU AUTOBLOQUANT M6	SELBSTSICHERNDE MUTTER M6	TUERCA AUTOBLOCANTE M6
	6	F000P00836	1	PARAFANGO POSTERIORE	REAR MUDGUARD	GARDE-BOUE ARRIÈRE	HINTERRADKOTFLÜGEL	GUARDABARROS TRASERO
	7	ZH0067545	2	VITE TEF M6x12	FLANGED EXAGON HEAD SCREW M6x12	BOULON DE BRIDE M6x12	FLANSCHENSCHRAUBE M6x12	TORNILLO DE REBORDE M6x12
	8	800041862	3	PASSACAVO	CABLE RING	PASSE-CÂBLE	KABELDURCHFÜHRUNG	PASACABLE
	9	Z00062727	5	VITE TEF M6x16	FLANGED EXAGON HEAD SCREW M6x16	BOULON DE BRIDE M6x16	FLANSCHENSCHRAUBE M6x16	TORNILLO DE REBORDE M6x16
	10	8000B2789	3	DISTANZIALE	SPACER	ENTRETOISE	ABSTANDHALTER	DISTANCIADOR
	11	Z00061313	3	DADO M6	NUT M6	ECROU M6	MUTTER M6	TUERCA M6
	12	73032132	1	PIASTRINA	PLATE	PLAQUETTE	PLÄTTCHEN	PLACA
	13	73012329	2	GOMMINO PASSAGGIO CAVI	RUBBER SLEEVE	JOINT EN CAOUTCHOUC	GUMMISCHEIBE	GOMA
	14	73280100	1	SUPPORTO TARGA	LICENCE PLATE SUPPORT	SUPPORT PLAQUE D'IMM.	KENNZEICHENHALTERUNG	SOPORTE MATRÍCULA
	15	73060039	1	CATADIOTTRO	REFLECTOR	CATADIOPTRE	RÜCKSTRAHLER	CATADIÓPTRICO
	16	Z00061313	2	DADO M6	NUT M6	ECROU M6	MUTTER M6	TUERCA M6
	17	73012164	1	GOMMINO PER PORTATARGA	CUSHION RUBBER, REAR LICENSE	JOINT EN CAOUTCHOUC	GUMMISCHEIBE	GOMA
	18	ZH0067545	3	VITE TEF M6x12	FLANGED EXAGON HEAD SCREW M6x12	BOULON DE BRIDE M6x12	FLANSCHENSCHRAUBE M6x12	TORNILLO DE REBORDE M6x12
	19	62ND15504	2	ROSETTA Ø12x6,4x1	WASHER Ø12x6,4x1	RONDELLE Ø12x6,4x1	UNTERLEGSCHEIBE Ø12x6,4x1	ARANDELA Ø12x6,4x1
SILVER VASE	20	F000A00306	1	PANNELLO DESTRO	RH PANEL	PANNEAU DROIT	PANEEL RECHTS	PANEL DERECHO
GRAN TURISMO	20	F0B0A00306	1	PANNELLO DESTRO	RH PANEL	PANNEAU DROIT	PANEEL RECHTS	PANEL DERECHO
SILVER VASE	21	F000A00305	1	PANNELLO SINISTRO	LH PANEL	PANNEAU GAUCHE	PANEEL LINKS	PANEL IZQUIERDO
GRAN TURISMO	21	F0B0A00305	1	PANNELLO SINISTRO	LH PANEL	PANNEAU GAUCHE	PANEEL LINKS	PANEL IZQUIERDO
	22	73012510	4	GOMMINO ANTIVIBRANTE	SILENT-BLOCK	ANTIVIBRATION	SCHWINGUNGSDAMFER	ANTIVIBRADOR
	23	73010065	2	GOMMINO	RUBBER RING	JOINT EN CAOUTCHOUC	GUMMISCHEIBE	GOMA
	24	F000P00277	1	PARACOPPA	ENGINE BOTTOM PROTECTION	PROTECTION	SCHUTZ	PROTECCIÓN
	25	F000P00735	1	DISTANZIALE PARACOPPA	ENGINE GUARD SPACER	ENTRETOISE	ABSTANDHALTER	DISTANCIADOR
	26	F000P01126	1	VITE TEF M6x50	FLANGED EXAGON HEAD SCREW M6x50	BOULON DE BRIDE M6x50	FLANSCHENSCHRAUBE M6x50	TORNILLO DE REBORDE M6x50
	27	72040549	1	DISTANZIALE	SPACER	ENTRETOISE	ABSTANDHALTER	DISTANCIADOR
	28	73012323	1	GOMMINO	RUBBER RING	JOINT EN CAOUTCHOUC	GUMMISCHEIBE	GOMA
	29	Y00043928	1	DADO FRENATO M8	SELF-LOCKING NUT M8	ECROU AUTOBLOQUANT M8	SELBSTSICHERNDE MUTTER M8	TUERCA AUTOBLOCANTE M8
	30	60ND02558	1	VITE TCEI M8x35	SCREW TCEI M8x35	VIS TCEI M8x35	SCHRAUBE TCEI M8x35	TORNILLO TCEI M8x35

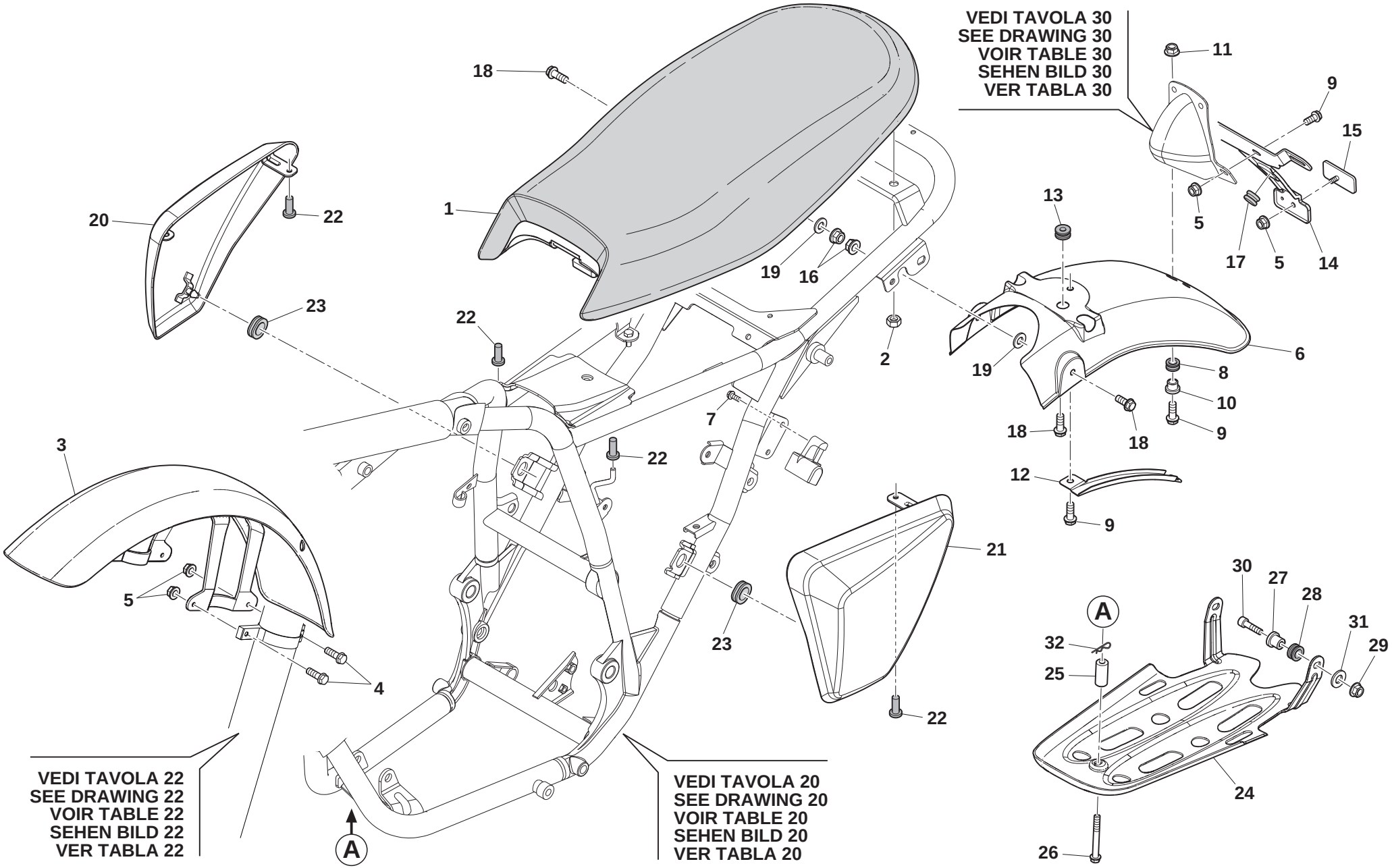
VEDI TAVOLA 30
SEE DRAWING 30
VOIR TABLE 30
SEHEN BILD 30
VER TABLA 30
VEDI TAVOLA 22
SEE DRAWING 22
VOIR TABLE 22
SEHEN BILD 22
VER TABLA 22
VEDI TAVOLA 20
SEE DRAWING 20
VOIR TABLE 20
SEHEN BILD 20
VER TABLA 20
A
1
2
3
4
5
6
7
8
9
10
11
12
13
14
15
16
17
18
19
20
21
22
23
24
25
26
27
28
29
30
31
32

PANNELLI, PARAFANGHI, SELLA - PANEL, FENDERS, SEAT
PANNEAU, GARDE-BOUES, SIEGE - STREIFEN, KOTFLUGEL, SATTEL
PANELO, GUARDABARROS, SILLIN

TAVOLA
DRAWING
TABLE
BILD
TABLA
19

Note Notes Notes Marke Notas	Pos. No. N. Index Pos.	N. Cod. Code No. Nr. Code Code Nr N. Cod.	Q.tà Q.ty Q.te M.ge C.ad	DENOMINAZIONE	NAME	DESIGNATION	BESHREIBUNG	DENOMINACION
	31	62ND15506	1	ROSETTA	WASHER	RONDELLE	UNTERLEGSCHEIBE	ARANDELA
	32	F000P01130	1	COPIGLIA DI SICUREZZA	SPLIT PIN	GOUPILLE	SPLINT	PASADOR

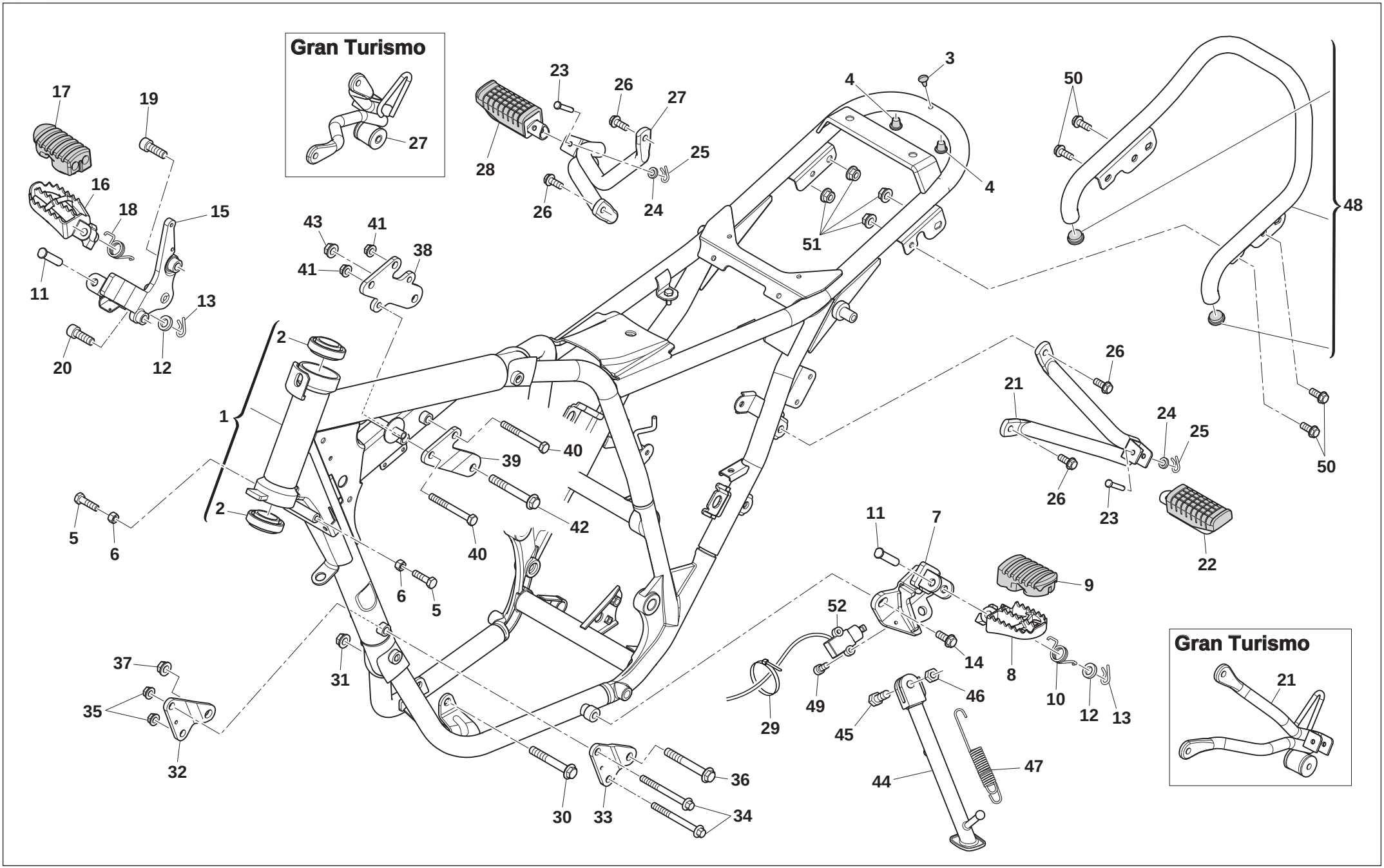
Gran Turismo
27
Gran Turismo
21
1
2
3
4
5
6
7
8
9
10
11
12
13
14
15
16
17
18
19
20
21
22
23
24
25
26
27
28
29
30
31
32
33
34
35
36
37
38
39
40
41
42
43
44
45
46
47
48
49
50
51
52

TELAIO, PEDANE - FRAME, FOOT RESTS
CADRE, REPOSE PIEDS - RAHMEN, FUSSBRETT
BASTIDOR, REPOSAPIES

Note Notes Notes Marke Notas	Pos. No. N. Index Pos.	N. Cod. Code No. Nr. Code Code Nr N. Cod.	Q.tà Q.ty Q.te M.ge C.ad	DENOMINAZIONE	NAME	DESIGNATION	BESHREIBUNG	DENOMINACION
	1	F000A00480	1	TELAIO CON CUSCINETTI	FRAME WITH BEARINGS	CHÂSSIS AVEC ROULEMENTS	RAHMEN MIT LAGERN	CHASIS CON COJINETES
	2	800087243	2	CUSCINETTO A RULLI CONICI	TAPERED ROLLER BEARING	ROULEMENT À ROULEAUX CONIQUES	KEGELROLLENLAGER	COJINETE DE RODILLOS CÓNICOS
	3	800058394	1	TAMPONE IN GOMMA	RUBBER BUFFER	TAMPON	PUFFER	TACO
	4	F000P01119	2	TAMPONE IN GOMMA Ø4	RUBBER BUFFER Ø4	TAMPON Ø4	PUFFER Ø4	TACO Ø4
	5	60ND01144	2	VITE TE M8x30	HEXAGON SOCKET-HEAD BOLT M8x30	VIS M8x30	SCHRAUBE M8x30	TORNILLO M8x30
	6	61ND15035	2	DADO M8x1,25	NUT M8x1,25	ECROU M8x1,25	MUTTER M8x1,25	TUERCA M8x1,25
	7	F000A00644	1	SUPPORTO PEDANA SINISTRA	L.H. FOOTREST SUPPORT	SUPPORT REPOSE-PIEDS GAUCHE	HALTERUNG FUßRASTE LINKS	SOPORTE ESTRIBO IZQUIERDA
	8	80A089962	1	PEDANA SINISTRA	L.H. FOOTREST	REPOSE-PIEDS GAUCHE	FUßRASTE LINKS	ESTRIBO IZQUIERDA
	9	F000P00138	1	GOMMINO PEDANA SINISTRA	LEFT FOOTREST RUBBER	CAOUTCHOUC	GUMMI	GOMA
	10	800096907	1	MOLLA PEDANA DESTRA	SPRING	RESSORT	FEDER	MUELLE
	11	Y00073140	2	PERNO	PIN	AXE	BOLZEN	EJE
	12	ZA0001815	2	ROSETTA Ø16x10,5x1	WASHER Ø16x10,5x1	RONDELLE Ø16x10,5x1	UNTERLEGSCHEIBE Ø16x10,5x1	ARANDELA Ø16x10,5x1
	13	64ND20068	2	COPIGLIA	SPLIT PIN	GOUPILLE	SPLINT	PASADOR
	14	ZG0062797	2	VITE TEF M10x22	FLANGED EXAGON HEAD SCREW M10x22	BOULON DE BRIDE M10x22	FLANSCHENSCHRAUBE M10x22	TORNILLO DE REBORDE M10x22
	15	F000A00444	1	SUPPORTO PEDANA DESTRA	R.H. FOOTREST SUPPORT	SUPPORT REPOSE-PIEDS DROIT	HALTERUNG FUßRASTE RECHTS	SOPORTE ESTRIBO DERECHA
	16	80A089953	1	PEDANA DESTRA	R.H. FOOTREST	REPOSE-PIEDS DROIT	FUßRASTE RECHTS	ESTRIBO DERECHA
	17	F000P00139	1	GOMMINO PEDANA DESTRA	RIGHT FOOTREST RUBBER	CAOUTCHOUC	GUMMI	GOMA
	18	800096908	1	MOLLA PEDANA DESTRA	SPRING	RESSORT	FEDER	MUELLE
	19	F000P01005	1	VITE TCEIF M10x30	BOLT TCEIF M10x30	VIS TCEIF M10x30	SCHRAUBE TCEIF M10x30	TORNILLO TCEIF M10x30
	20	ZE0062797	1	VITE TEF M10x40	FLANGED EXAGON HEAD SCREW M10x40	BOULON DE BRIDE M10x40	FLANSCHENSCHRAUBE M10x40	TORNILLO DE REBORDE M10x40
SILVER VASE	21	F000P00506	1	SUPPORTO PEDANA SINISTRA	L.H. FOOTREST SUPPORT	SUPPORT REPOSE-PIEDS GAUCHE	HALTERUNG FUßRASTE LINKS	SOPORTE ESTRIBO IZQUIERDA
GRAN TURISMO	21	F000P01067	1	SUPPORTO PEDANA SINISTRA	L.H. FOOTREST SUPPORT	SUPPORT REPOSE-PIEDS GAUCHE	HALTERUNG FUßRASTE LINKS	SOPORTE ESTRIBO IZQUIERDA
SILVER VASE	22	50718-BA7-9000	1	PEDANA PASSEGGERO SINISTRA	PASSENGER L.H. FOOTREST	REPOSE-PIEDS GAUCHE	FUßRASTE LINKS	ESTRIBO IZQUIERDA
GRAN TURISMO	22	41140389	1	PEDANA PASSEGGERO SINISTRA	PASSENGER L.H. FOOTREST	REPOSE-PIEDS GAUCHE	FUßRASTE LINKS	ESTRIBO IZQUIERDA
	23	S5015-81000	2	PERNO	PIN	AXE	BOLZEN	EJE
	24	72040633	2	ROSETTA Ø12x6,5x1	WASHER Ø12x6,5x1	RONDELLE Ø12x6,5x1	UNTERLEGSCHEIBE Ø12x6,5x1	ARANDELA Ø12x6,5x1
	25	64ND20068	2	COPIGLIA	SPLIT PIN	GOUPILLE	SPLINT	PASADOR
	26	Z00069056	4	VITE TEF M8x20	FLANGED EXAGON HEAD SCREW M8x20	BOULON DE BRIDE M8x20	FLANSCHENSCHRAUBE M8x20	TORNILLO DE REBORDE M8x20
SILVER VASE	27	F000P00505	1	SUPPORTO PEDANA DESTRA	R.H. FOOTREST SUPPORT	SUPPORT REPOSE-PIEDS DROIT	HALTERUNG FUßRASTE RECHTS	SOPORTE ESTRIBO DERECHA
GRAN TURISMO	27	F000P01070	1	SUPPORTO PEDANA DESTRA	R.H. FOOTREST SUPPORT	SUPPORT REPOSE-PIEDS DROIT	HALTERUNG FUßRASTE RECHTS	SOPORTE ESTRIBO DERECHA
SILVER VASE	28	50715-BA7-9000	1	PEDANA PASSEGGERO DESTRA	PASSENGER R.H. FOOTREST	REPOSE-PIEDS DROIT	FUßRASTE RECHTS	ESTRIBO DERECHA
GRAN TURISMO	28	41150387	1	PEDANA PASSEGGERO DESTRA	PASSENGER R.H. FOOTREST	REPOSE-PIEDS DROIT	FUßRASTE RECHTS	ESTRIBO DERECHA
	29	800056444	1	FASCETTA L=188 mm	CLAMP L=188 mm	COLLIER L=188 mm	SCHELLE L=188 mm	ABRAZADERA L=188 mm

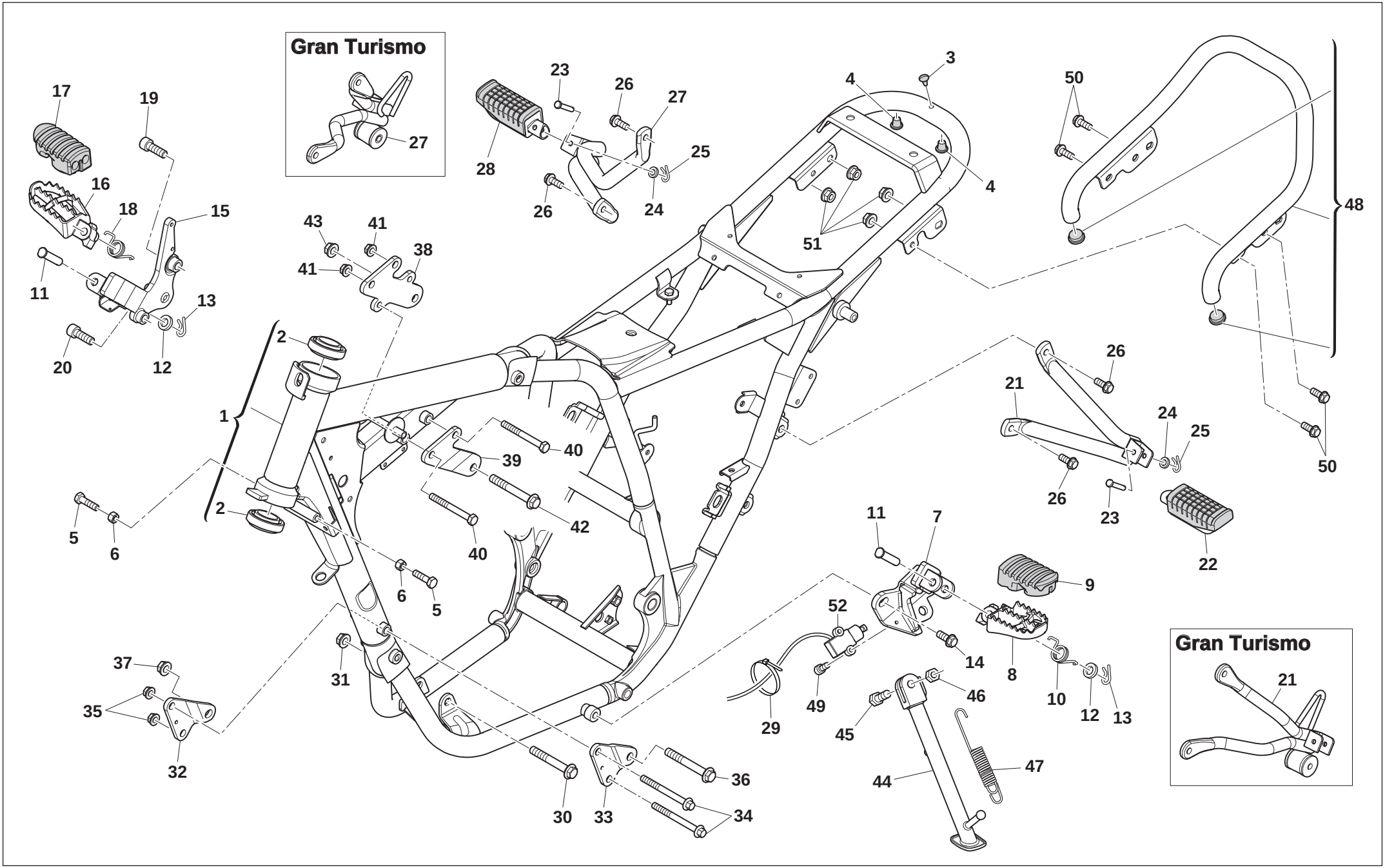
Gran Turismo
27
Gran Turismo
21
1
2
3
4
5
6
9
10
11
12
13
14
15
16
17
18
19
20
21
22
23
24
25
26
27
28
29
30
31
32
33
34
35
36
37
38
39
40
41
42
43
44
45
46
47
48
49
50
51
52

TELAIO, PEDANE - FRAME, FOOT RESTS
CADRE, REPOSE PIEDS - RAHMEN, FUSSBRETT
BASTIDOR, REPOSAPIES

Note Notes Notes Marke Notas	Pos. No. N. Index Pos.	N. Cod. Code No. Nr. Code Code Nr N. Cod.	Q.tà Q.ty Q.te M.ge C.ad	DENOMINAZIONE	NAME	DESIGNATION	BESHREIBUNG	DENOMINACION
	30	ZT0069138	1	VITE TEF M10x70	SCREW M10x70	BOULON DE BRIDE M10x70	FLANSCHENSCHRAUBE M10x70	TORNILLO DE REBORDE M10x70
	31	Z00042022	1	DADO FLANGIATO M10	FLANGED NUT M10	ECROU BRIDE M10	FLANSCHMUTTER M10	TUERCA CON BRIDA M10
	32	F000P00482	1	PIASTRA ANT. DESTRA MOTORE	R.H. FRONT ENGINE PLATE	PLAQUE MOTEUR AV. D.	PLATTE MOTOR VORNE RECHTS	PLACA MOTOR DEL. DER.
	33	F000P00483	1	PIASTRA ANT. SINISTRA MOTORE	L.H. FRONT ENGINE PLATE	PLAQUE MOTEUR AV. G.	PLATTE MOTOR VORNE LINKE	PLACA MOTOR DEL. IZQ.
	34	YU0073458	2	VITE M8x85	SCREW M8x85	VIS M8x85	SCHRAUBE M8x85	TORNILLO M8x85
	35	Y00043928	2	DADO FLANGIATO M8x1,25	FLANGED NUT M8x1,25	ECROU BRIDE M8x1,25	FLANSCHMUTTER M8x1,25	TUERCA CON BRIDA M8x1,25
	36	ZS0069138	1	VITE TEF M10x75	FLANGED EXAGON HEAD SCREW M10x75	BOULON DE BRIDE M10x75	FLANSCHENSCHRAUBE M10x75	TORNILLO DE REBORDE M10x75
	37	Z00042022	1	DADO FLANGIATO M10x1,25	FLANGED NUT M10x1,25	ECROU BRIDE M10x1,25	FLANSCHMUTTER M10x1,25	TUERCA CON BRIDA M10x1,25
	38	F000P00633	1	PIASTRA MOTORE DESTRA	R.H. ENGINE PLATE	PLAQUE MOTEUR D.	PLATTE MOTOR RECHTS	PLACA MOTOR DER.
	39	F000P00634	1	PIASTRA MOTORE SINISTRA	L.H. ENGINE PLATE	PLAQUE MOTEUR G.	PLATTE MOTOR LINKE	PLACA MOTOR IZQ.
	40	ZV0073458	2	VITE TEF M8x75	FLANGED EXAGON HEAD SCREW M8x75	BOULON DE BRIDE M8x75	FLANSCHENSCHRAUBE M8x75	TORNILLO DE REBORDE M8x75
	41	Y00043928	2	DADO FLANGIATO M8x1,25	FLANGED NUT M8x1,25	ECROU BRIDE M8x1,25	FLANSCHMUTTER M8x1,25	TUERCA CON BRIDA M8x1,25
	42	ZT0069138	1	VITE TEF M10x70	FLANGED EXAGON HEAD SCREW M10x70	BOULON DE BRIDE M10x70	FLANSCHENSCHRAUBE M10x70	TORNILLO DE REBORDE M10x70
	43	Z00042022	1	DADO FLANGIATO M10X1,25	FLANGED NUT M10X1,25	ECROU BRIDE M10X1,25	FLANSCHMUTTER M10X1,25	TUERCA CON BRIDA M10X1,25
SILVER VASE	44	F000P00519	1	CAVALLETTO LATERALE	LATERAL STAND	BÉQUILLE	STÄNDER	CABALLETE LATERAL
GRAN TURISMO	44	F000P01484	1	CAVALLETTO LATERALE	LATERAL STAND	BÉQUILLE	STÄNDER	CABALLETE LATERAL
	45	72030710	1	VITE ROTAZIONE CAVALLETTO LATERALE	SIDE STAND SCREW	VIS BÉQUILLE	SCHRAUBE STÄNDER	TORNILLO CABALLETE
	46	72020534	1	DADO PER CAVALLETTO LATERALE	SIDE STAND NUT	ECROU POUR BÉQUILLE	MUTTER	TUERCA CABALLETE
	47	72050555	1	MOLLA	SPRING	RESSORT	FEDER	MUELLE
	48	F000A00821	1	MANIGLIA PASSEGGERO	PASSENGERS HANDLE	POIGNÉE PASSAGER	GRIFF	MANILLA ACOMPAÑANTE
	49	60ND07330	2	VITE TCEI M5x16	SCREW TCEI M5x16	VIS TCEI M5x16	SCHRAUBE TCEI M5x16	TORNILLO TCEI M5x16
	50	Z00069056	4	VITE TEF M8x20	FLANGED EXAGON HEAD SCREW M8x20	BOULON DE BRIDE M8x20	FLANSCHENSCHRAUBE M8x20	TORNILLO DE REBORDE M8x20
	51	Y00043928	2	DADO FRENATO M8	SELF-LOCKING NUT M8	ECROU AUTOBLOQUANT M8	SELBSTSICHERNDE MUTTER M8	TUERCA AUTOBLOCANTE M8
	52	31120016	1	INTERRUTTORE CAVALLETTO	POWEROFF SWITCH	INTERRUPTEUR	SCHALTER	INTERRUPTOR

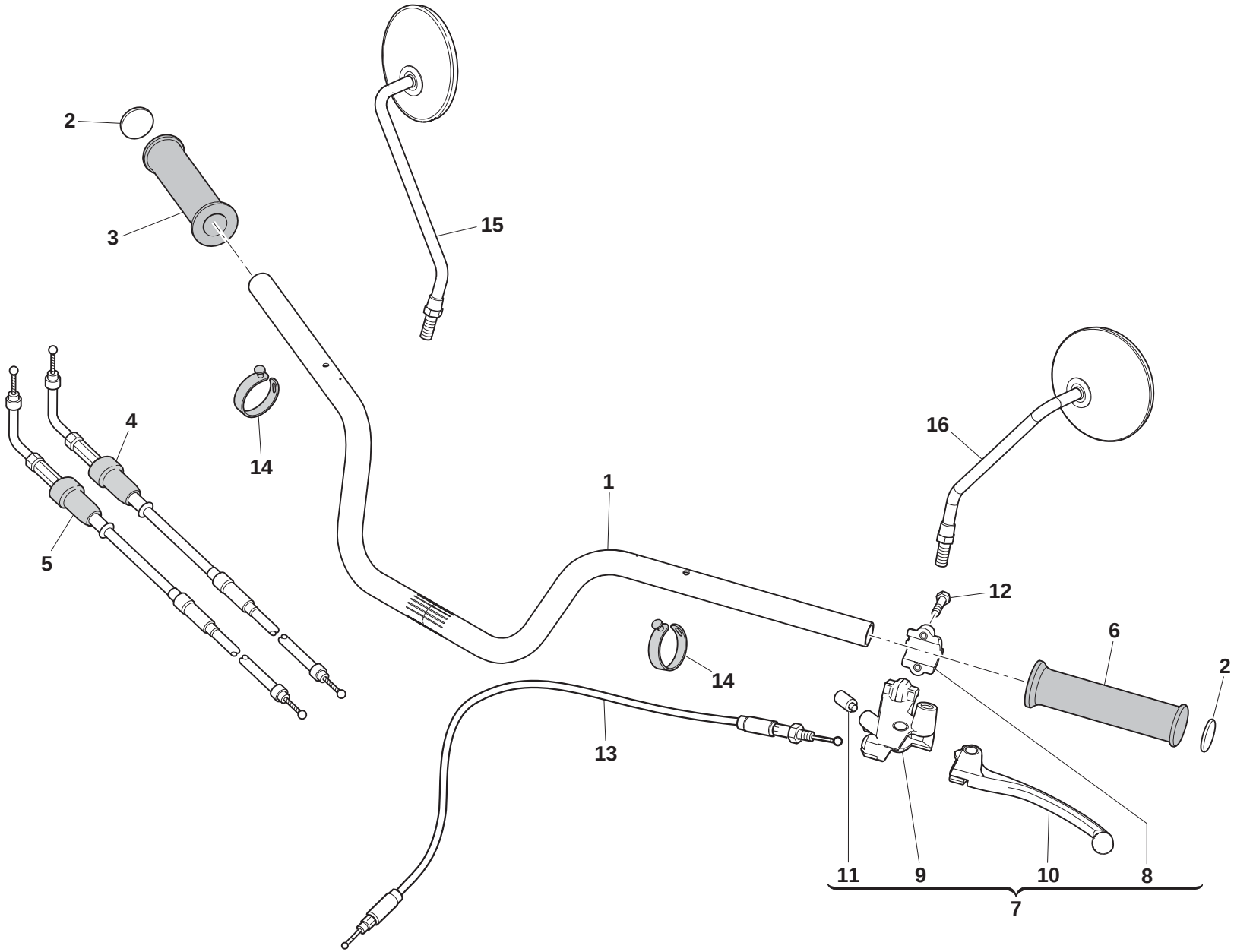
2
3
15
4
14
1
16
5
12
6
2
14
13
11
9
10
8
7

MANUBRIO E COMANDI - HANDLEBAR AND CONTROLS
GUIDON ET COMMANDES - LENKER UND STEUERORGANE
MANILLAR Y MANDOS

Note Notes Notes Marke Notas	Pos. No. N. Index Pos.	N. Cod. Code No. Nr. Code Code Nr N. Cod.	Q.tà Q.ty Q.te M.ge C.ad	DENOMINAZIONE	NAME	DESIGNATION	BESHREIBUNG	DENOMINACION
SILVER VASE	1	F000P00441	1	MANUBRIO	HANDLEBAR	GUIDON	LENKER	MANILLAR
GRAN TURISMO	1	F000P01072	1	MANUBRIO	HANDLEBAR	GUIDON	LENKER	MANILLAR
	2	45020044	2	CONTRAPPESO	COUNTERWEIGHT	CONTREPOIDS	GEGENGEWICHT	CONTRAPESO
	3	F000A00883	1	COMANDO GAS COMPLETO	COMPLETE THROTTLE CONTROL	COMMANDE DES GAZ COMPLÈTE	GASZUG KOMPLETT	MANDO ACELERADOR COMPLETO
	4	47030328	1	CAVO ACCELLERATORE	CABLE ASSY, THROTTLE	CÂBLE COMMANDE DES GAZ	KABEL GASZUG	CABLE ACELERADOR
	5	F000A00796	1	ASSIEME CAVO ACCEL. CON PIASTRINA	CABLE ASSY THROTTLE WITH CLAMP	CÂBLE COMM. DES GAZ COMPLÈTE	KABEL GASZUG KOMPLETT	CABLE ACELERADOR COMPLETO
	6	45060104	1	MANOPOLA SINISTRA	L.H. HANDGRIP	POIGNÉE GAUCHE	GRIFF LINKS	PUÑO IZQUIERDA
	7	45190141	1	ASSIEME COMANDO FRIZIONE	CLUTCH CONTROL ASSY	COMMANDE EMBRAYAGE COMPLÈTE.	ZUSAMMENBAU KUPPLUNGSZUG	CONJUNTO MANDO EMBRAGUE
	8	45210005	1	FISSAGGIO	CONNECT CLIP	FIXATION	BEFESTIGUNG	FIJACIÓN
	9	45210004	1	SUPPORTO	CONNECT SEAT	SUPPORT	HALTERUNG	SOPORTE
	10	45190142	1	LEVA FRIZIONE	CLUTCH LEVER	LEVIER EMBRAYAGE	KUPPLUNGSHEBEL	PALANCA EMBRAGUE
	11	45530026	1	INTERRUTTORE LEVA FRIZIONE	CLUTCH LEVER SWITCH	INTER. LEVIER EMBRAYAGE	KUPPLUNGSCHALTER	INTER.PALANCAEMBRAGUE
	12	Z00062728	2	VITE TEF M6x20	FLANGED EXAGON HEAD SCREW M6x20	BOULON DE BRIDE M6x20	FLANSCHENSCHRAUBE M6x20	TORNILLO DE REBORDE M6x20
	13	F000801179	1	CAVO FRIZIONE	CLUTCH CABLE	CÂBLE	KABEL	CABLE
	14	800092247	4	FASCETTA IN GOMMA L=62 mm	RUBBER CLAMP L=62 mm	COLLIER EN CAOUTCHOUC L=62 mm	GUMMISCHELLE L=62 mm	ABRAZADERA DE GOMA L=62 mm
	15	53230279	1	SPECCHIETTO RETROV. DX	R.H. REAR-VIEW MIRROR	RÉTROVISEUR DROITE	RÜCKSPIEGEL RECHTS	ESPEJO RETROV. DER.
	16	53240267	1	SPECCHIETTO RETROV. SX	L.H. REAR-VIEW MIRROR	RÉTROVISEUR GAUCHE	RÜCKSPIEGEL LINKE	ESPEJO RETROV. IZQ.

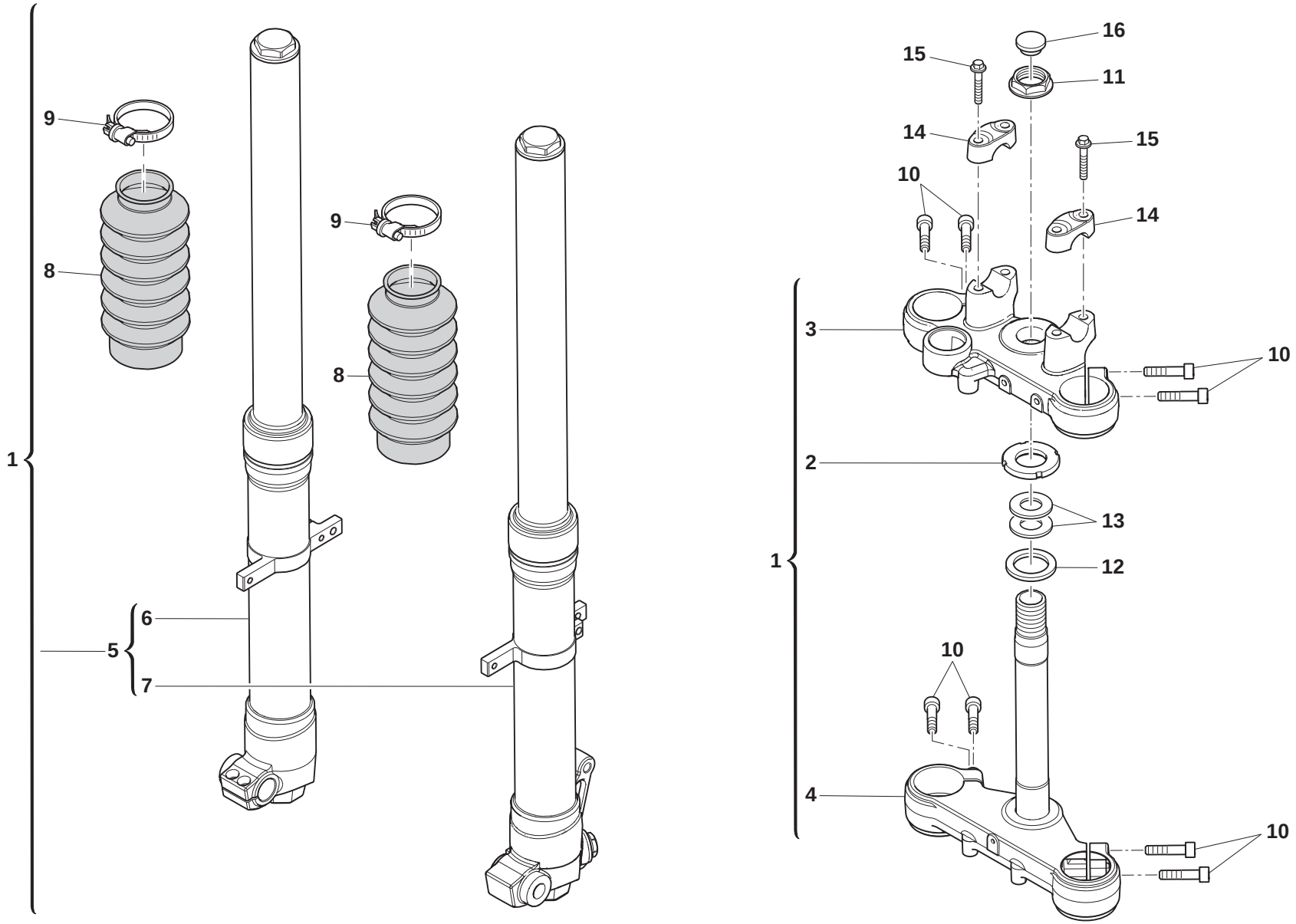
1
9
8
9
8
5
6
7
16
15
11
14
15
10
14
3
10
2
13
1
12
10
4
10

SOSPENSIONE ANTERIORE - FRONT FORK ASSEMBLY
SUSPENSION AVANT - VORDERTELESKOPGABEL
SUSPENSION DELANTERA

Note Notes Notes Marke Notas	Pos. No. N. Index Pos.	N. Cod. Code No. Nr. Code Code Nr N. Cod.	Q.tà Q.ty Q.te M.ge C.ad	DENOMINAZIONE	NAME	DESIGNATION	BESHREIBUNG	DENOMINACION
	1	F000A00651	1	ASS. SOSPENSIONE ANTERIORE	FRONT SUSPENSION ASSY	SUSPENSION AVANT	RADAUFHAENGUNG VORDER	SUSPENSION DELANTERA
	2	8A0087717	1	GHIERA PER PERNO DI STERZO	RING NUT	BAGUE	GEWINDERING	TUERCA ANULAR
	3	F000P00496	1	TESTA DI STERZO	STEERING HEAD	TETE DE DIRECTION	LENKKOPF	CABEZAL DE DIRECCIÓN
	4	F000A00652	1	BASE DI STERZO CON PERNO	BOTTOM YOKE WITH PIN	BASE DE DIRECTION AVEC AXE	LENKLAGER MIT BOLZEN	BASE DE DIRECCIÓN CON EJE
	5	F000A00431	1	ASSIEME GAMBE FORCELLA	FORK LEG ASSY	ENSEMBLE FOURCHE	GABELGRUPPE	GRUPO HORQUILLA
	6	F000A00653	1	GAMBA DX COMPLETA	COMPLETE RH SHOCK ABSORBER	BRANCHE DROITE COMPLÈTE	FEDERBEIN RECHTS KOMPLETT	PATA DER. COMPLETA
	7	F000A00654	1	GAMBA SX COMPLETA	COMPLETE LH SHOCK ABSORBER	BRANCHE GAUCHE COMPLÈTE	FEDERBEIN LINKE KOMPLETT	PATA IZQ. COMPLETA
	8	F000P00845	2	SOFFIETTO	RUBBER PROTECTION	PROTECTION	SCHUTZ	PROTECCIÓN
	9	F000P01063	2	FASCETTA	CLAMP	COLLIER	SCHELLE	ABRAZADERA
	10	60ND02558	8	VITE TCEI M8x35	SCREW TCEI M8x35	VIS TCEI M8x35	SCHRAUBE TCEI M8x35	TORNILLO TCEI M8x35
	11	8A0069315	1	DADO M26	NUT M26	ECROU M26	MUTTER M26	TUERCA M26
	12	800087736	1	ROSETTA Ø40,5x29,5x2	WASHER Ø40,5x29,5x2	RONDELLE Ø40,5x29,5x2	UNTERLEGSCHEIBE Ø40,5x29,5x2	ARANDELA Ø40,5x29,5x2
	13	800087745	2	GUARNIZIONE DI TENUTA	GASKET	JOINT D'ÉTANCHÉITÉ	DICHTUNG	JUNTA DE ESTANQUEIDAD
	14	F000P00548	2	MORSETTO SUPERIORE	UPPER CLAMP	ETRIER SUPÉRIEUR	KLEMME OBEN	BORNE SUPERIOR
	15	ZK0069056	4	VITE TEF M8x35	FLANGED EXAGON HEAD SCREW M8x35	BOULON DE BRIDE M8x35	FLANSCHENSCHRAUBE M8x35	TORNILLO DE REBORDE M8x35
	16	F000P00912	1	TAPPO	PLUG	BOUCHON	STOPFEN	TAPON

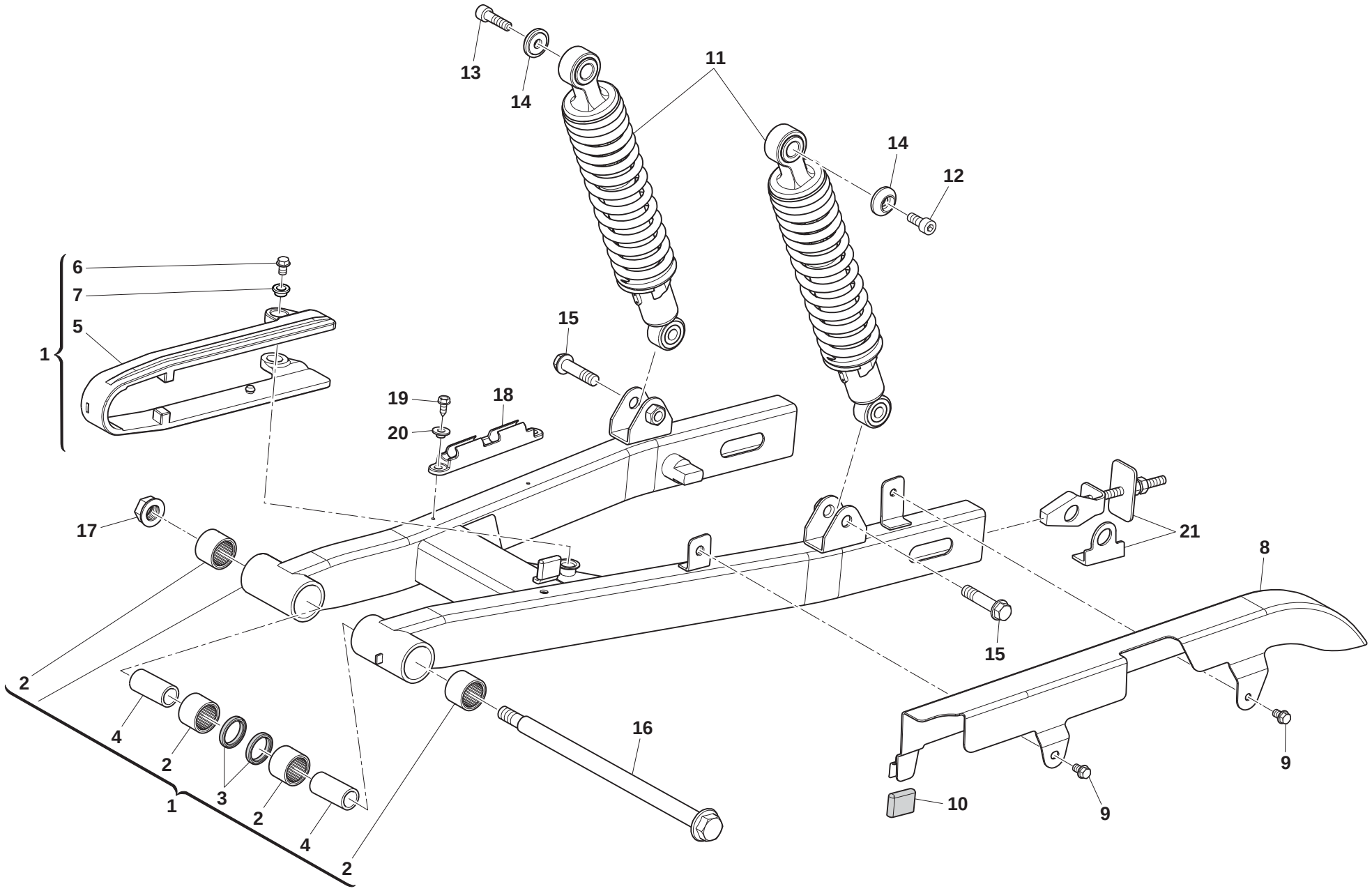
13
14
11
14
12
6
7
5
1
15
19
20
18
17
21
8
2
4
2
3
2
4
2
1
16
15
10
9
9

FORCELLONE E AMMORTIZZATORE POSTERIORE - REAR SWING ARM AND SUSPENSION
FOURCHE AT SUSPENSION ARRIERE - HINTERHAUFHANGUNG
HORQUILLA Y SUSPENSION TRASERA

Note Notes Notes Marke Notas	Pos. No. N. Index Pos.	N. Cod. Code No. Nr. Code Code Nr N. Cod.	Q.tà Q.ty Q.te M.ge C.ad	DENOMINAZIONE	NAME	DESIGNATION	BESHREIBUNG	DENOMINACION
	1	F000A00439	1	FORCELLONE COMPLETO	COMPLETE SWINGING ARM	BRAS OSCILLANT COMPLET	SCHWINGE KOMPLETT	BASCULANTE COMPLETO
	2	41280414	4	CUSCINETTO A RULLI 6903	BEARING 6903	ROULEMENT 6903	LAGER 6903	COJINETE 6903
	3	72110236	4	GUARNIZIONE FB 30x22x7	GASKET FB 30x22x7	JOINT FB 30x22x7	DICHTUNG FB 30x22x7	JUNTA FB 30x22x7
	4	70280011	2	BUSSOLA FORCELLONE	FORK BUSHING	DOUILLE BRAS OSCILLANT	BUCHSE SCHWINGE	CASQUILLO BASCULANTE
	5	73110077	1	PATTINO CATENA	CHAIN SLIDER	PATIN CHAÎNE	KETTENSPANNERAUFLAGE	PATÍN CADENA
	6	72011922	2	VITE TC M6x12	SCREW TC M6x12	VIS TC M6x12	SCHRAUBE TC M6x12	TORNILLO TC M6x12
	7	70120280	2	BUSSOLA FLANGIATA	FLANGED BUSHING	DOUILLE À BRIDE	FLANSCHBUCHSE	CASQUILLO CON BRIDA
	8	F000P00475	1	COPRICATENA	CHAIN GUARD	CARTER DE CHAÎNE	KETTENKASTEN	CUBRECADENA
	9	Z00062725	2	VITE TEF M6x10	FLANGED EXAGON HEAD SCREW M6x10	BOULON DE BRIDE M6x10	FLANSCHENSCHRAUBE M6x10	TORNILLO DE REBORDE M6x10
	10	73012153	1	GOMMINO PER COPRICATENA	RUBBER FOR CHAIN COVER	JOINT EN CAOUTCHOUC	GUMMISCHEIBE	GOMA
	11	41070510	2	AMMORTIZZATORE POSTERIORE	REAR SHOCK ABSORBER	AMORTISSEUR ARRIÈRE COMPLET	STOßDÄMPFER KOMPLETT	AMORTIGUADOR COMPLETO
	12	60ND02555	1	VITE TCEI M8x20	SCREW TCEI M8x20	VIS TCEI M8x20	SCHRAUBE TCEI M8x20	TORNILLO TCEI M8x20
SILVER VASE	13	60ND02557	1	VITE TCEI M8x30	SCREW TCEI M8x30	VIS TCEI M8x30	SCHRAUBE TCEI M8x30	TORNILLO TCEI M8x30
GRAN TURISMO	13	60ND02555	1	VITE TCEI M8x20	SCREW TCEI M8x20	VIS TCEI M8x20	SCHRAUBE TCEI M8x20	TORNILLO TCEI M8x20
	14	F000P00760	2	RONDELLA CONICA	CONIC SPACER	RONDELLE CONIQUE	UNTERLEGSCHEIBE	ARANDELA CONICA
	15	Z00062573	2	VITE TEF M10x40	FLANGED EXAGON HEAD SCREW M10x40	BOULON DE BRIDE M10x40	FLANSCHENSCHRAUBE M10x40	TORNILLO DE REBORDE M10x40
	16	70030169	1	PERNO FORCELLONE	SWINGING ARM PIN	AXE BRAS OSCILLANT	BOLZEN SCHWINGE	EJE BASCULANTE
	17	72020488	1	DADO M14x1,5	NUT M14x1,5	ECROU M14x1,5	MUTTER M14x1,5	TUERCA M14x1,5
	18	8000B1166	1	PASSATUBO	HOSE RING	PASSE-TUBE	LEITUNGSDURCHFÜHRUNG	PASATUBO
	19	Z00067997	2	VITE TEF M5x12	FLANGED EXAGON HEAD SCREW M5x12	BOULON DE BRIDE M5x12	FLANSCHENSCHRAUBE M5x12	TORNILLO DE REBORDE M5x12
	20	800069282	2	BUSSOLA D14-D7-D5,25	BUSHING D14-D7-D5,25	DOUILLE D14-D7-D5,25	BUCHSE D14-D7-D5,25	CASQUILLO D14-D7-D5,25
	21	54140132	2	ASSIEME TENDICATENA	HAIN TENSIONER ASSY	TENDEUR DE CHAÎNE COMPLET	KETTENSPANNER KOMPLETT	TENSOR DE CADENA COMPLETO

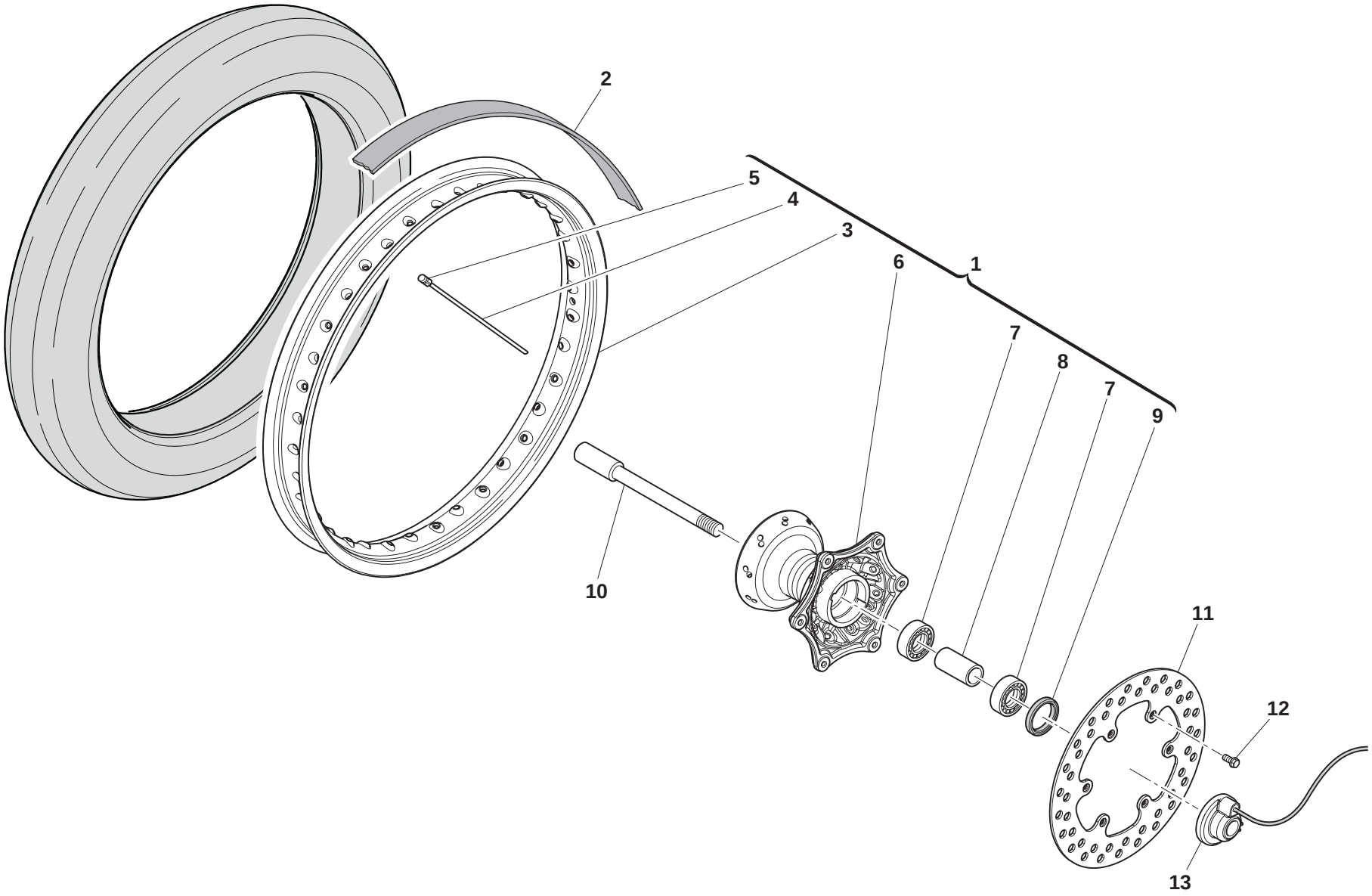
2
5
4
3
6
1
7
8
7
9
10
11
12
13

RUOTA ANTERIORE - FRONT WHEEL
ROUE AVANT - VORTERRAD
RUEDA DELANTERA

TAVOLA
DRAWING
TABLE
BILD
TABLA

24

Note Notes Notes Marke Notas	Pos. No. N. Index Pos.	N. Cod. Code No. Nr. Code Code Nr N. Cod.	Q.tà Q.ty Q.te M.ge C.ad	DENOMINAZIONE	NAME	DESIGNATION	BESHREIBUNG	DENOMINACION
	1	F000A00521	1	RUOTA ANTERIORE COMPLETA	FRONT WHEEL ASSY	ROUE AVANT COMPLÈTE	VORDERRAD KOMPLETT	RUEDA DELANTERA COMPLETA
	2	8C0082879	1	PROTEZIONE CAMERA D'ARIA	AIR TUBE PROTECTION	VAINE DE PROTECTION	HULLE	VAINA DE PROTECCION
	3	F000P00522	1	CERCHIO RUOTA ANT. 19"X1.85"	FRONT WHEEL RIM 19"X1.85"	JANTE ROUE AVANT 19"X1.85"	FELGE VORDERRAD 19"X1.85"	LLANTA RUEDA DEL. 19"X1.85"
	4	F000P00523	36	RAGGIO	SPOKE	BRAS	SPEICHE	RADIO
	5	F000P00524	36	NIPPLO	NIPPLE	NIPPLE	NIPPEL	NIPLE
	6	F000P00526	1	MOZZO RUOTA ANTERIORE	FRONT WHEEL HUB	MOYEU	NABE	CUBO
	7	70090217	2	CUSCINETTO 6303 2RS-CJB	BEARING 6303 2RS-CJB	ROULEMENT 6303 2RS-CJB	LAGER 6303 2RS-CJB	COJINETE 6303 2RS-CJB
	8	70210024	1	DISTANZIALE INTERNO	INTERNAL SPACER	ENTRETOISE INTÉRIEUR	INTERNER ABSTANDHALTER	DISTANCIADOR INTERNO
	9	72110227	1	GUARNIZIONE Ø21x47x5	SEAL Ø21x47x5	JOINT Ø21x47x5	DICHTUNG Ø21x47x5	JUNTA Ø21x47x5
	10	70050123	1	PERNO RUOTA	WHEEL AXLE	PIVOT DE ROUE	RADASCHE	EJE RUEDA
	11	F000P00438	1	DISCO FRENO ANTERIORE	FRONT BRAKE DISC	DISQUE DE FREIN	BREMSSCHEIBE	DISCO FRENO
	12	Z00062726	6	VITE TEF M6x14	FLANGED EXAGON HEAD SCREW M6x14	BOULON DE BRIDE M6x14	FLANSCHENSCHRAUBE M6x14	TORNILLO DE REBORDE M6x14
	13	E000P00873	1	SENSORE MAGNETICO	MAGNETIC SENSOR	CAPTEUR MAGNÉTIQUE	MAGNETSENSOR	SENSOR MAGNÉTICO

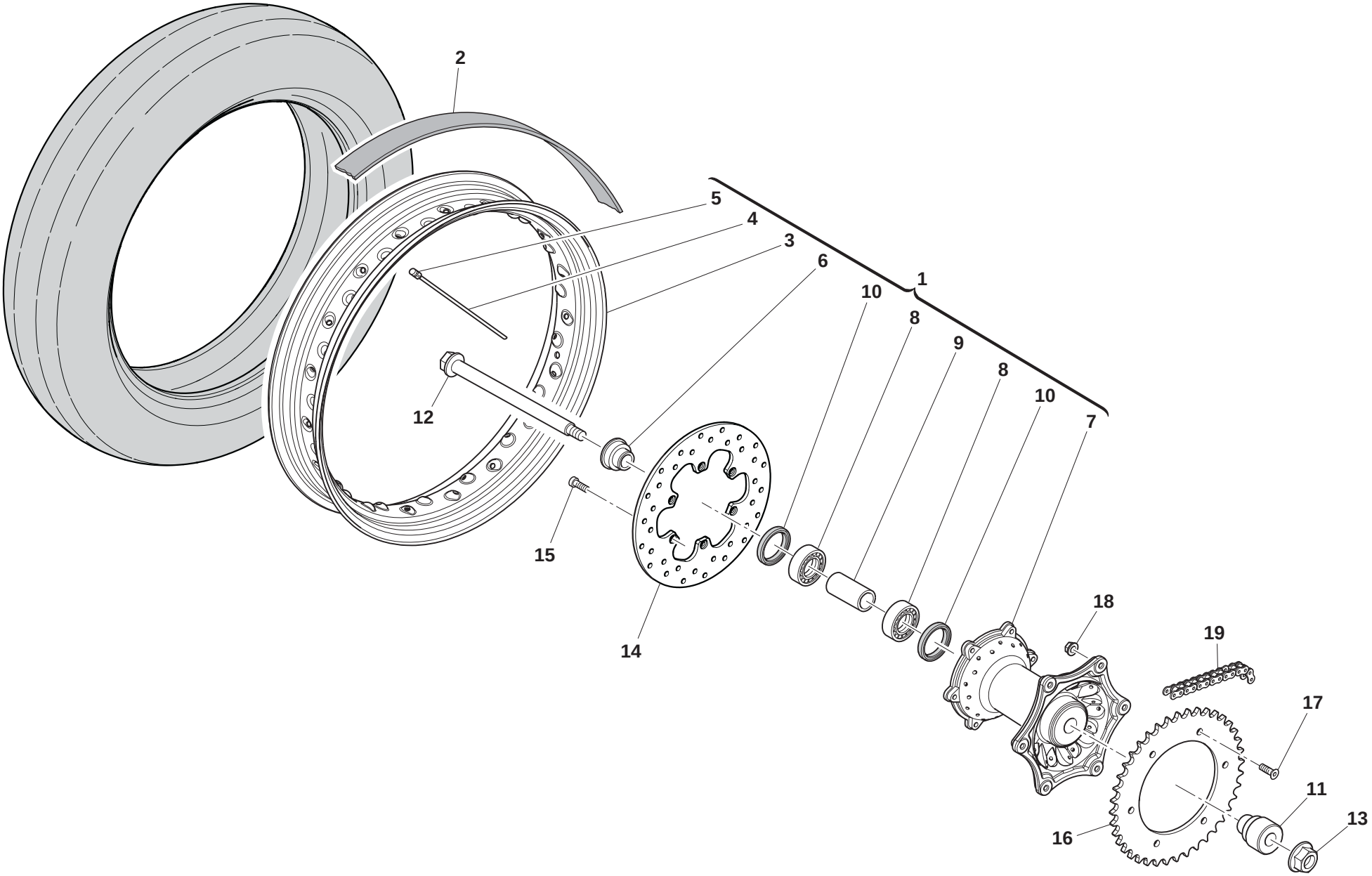
2
5
4
3
6
1
10
8
9
8
10
7
12
15
14
18
19
17
11
13
16

RUOTA POSTERIORE - REAR WHEEL
ROUE ARRIERE - HINTERRAD
RUEDA TRASERA

TAVOLA
DRAWING
TABLE
BILD
TABLA

25

Note Notes Notes Marke Notas	Pos. No. N. Index Pos.	N. Cod. Code No. Nr. Code Code Nr N. Cod.	Q.tà Q.ty Q.te M.ge C.ad	DENOMINAZIONE	NAME	DESIGNATION	BESHREIBUNG	DENOMINACION
	1	F000A00533	1	RUOTA POSTERIORE SENZA PNEUMATICO	REAR WHEEL WITHOUT TYRE	ROUE ARRIÈRE SANS PNEU	HINTERRAD OHNE TYRE	RUEDA TRASERA NEUMÁTICOS SIN
	2	8B0082879	1	PROTEZIONE CAMERA D'ARIA	AIR TUBE PROTECTION	VAINE DE PROTECTION	HULLE	VAINA DE PROTECCION
	3	F000P00534	1	CERCHIO RUOTA POST. 3.00"x17"	REAR WHEEL RIM 3.00"x17"	JANTE ROUE ARRIÈRE 3.00"x17"	FELGE HINTERRAD 3.00"x17"	LLANTA RUEDA TRAS. 3.00"x17"
	4	F000P00535	18	RAGGIO	SPOKE	BRAS	SPEICHE	RADIO
	4	F000P00901	18	RAGGIO	SPOKE	BRAS	SPEICHE	RADIO
	5	F000P00536	36	NIPPLO	NIPPLE	NIPPLE	NIPPEL	NIPLE
	6	F000P00461	1	DISTANZIALE	SPACER	ENTRETOISE	ABSTANDHALTER	DISTANCIADOR
	7	F000P00538	1	MOZZO RUOTA POSTERIORE	REAR WHEEL HUB	MOYEU	NABE	CUBO
	8	70090218	2	CUSCINETTO 6005 2RS-CJB	BEARING 6005 2RS-CJB	ROULEMENT 6005 2RS-CJB	LAGER 6005 2RS-CJB	COJINETE 6005 2RS-CJB
	9	70210025	1	DISTANZIALE MOZZO	INNER REAR HUB SPACER	ENTRETOISE	ABSTANDHALTER	DISTANCIADOR
	10	72110228	2	GUARNIZIONE Ø25x47x5	SEAL Ø25x47x5	JOINT Ø25x47x5	DICHTUNG Ø25x47x5	JUNTA Ø25x47x5
	11	F000P00462	1	DISTANZIALE	SPACER	ENTRETOISE	ABSTANDHALTER	DISTANCIADOR
	12	70080129	1	PERNO RUOTA	WHEEL AXLE	PIVOT DE ROUE	RADASCHE	EJE RUEDA
	13	72020489	1	DADO M16	NUT M16	ECROU M16	MUTTER M16	TUERCA M16
	14	F000P00437	1	DISCO FRENO POSTERIORE	REAR BRAKE DISC	DISQUE DE FREIN	BREMSSCHEIBE	DISCO FRENO
	15	YA0055241	6	VITE TCEI M6x14	SCREW TCEI M6x14	VIS TCEI M6x14	SCHRAUBE TCEI M6x14	TORNILLO TCEI M6x14
	16	F000P00477	1	CORONA DENTATA Z=40	CHAIN SPROCKET T=40	COURONNE DENTÉE D=40	ZAHNKRANZ Z=40	CORONA DENTADA Z=40
	17	800040796	6	VITE TSEI M8x31	SCREW TSEI M8x31	VIS TSEI M8x31	SCHRAUBE TSEI M8x31	TORNILLO TSEI M8x31
	18	Y00043928	6	DADO FRENATO M8x1,25	SELF-LOCKING NUT M8x1,25	ECROU AUTOBLOQUANT M8x1,25	SELBSTSICHERNDE MUTTER M8x1,25	TUERCA AUTOBLOCANTE M8x1,25
	19	F000P01133	1	CATENA 108 MAGLIE	CHAIN,108 PITCHES	CHAÎNE 108 MAILLONS	KETTE 108 GLIEDER	CADENA 108 ESLABONES

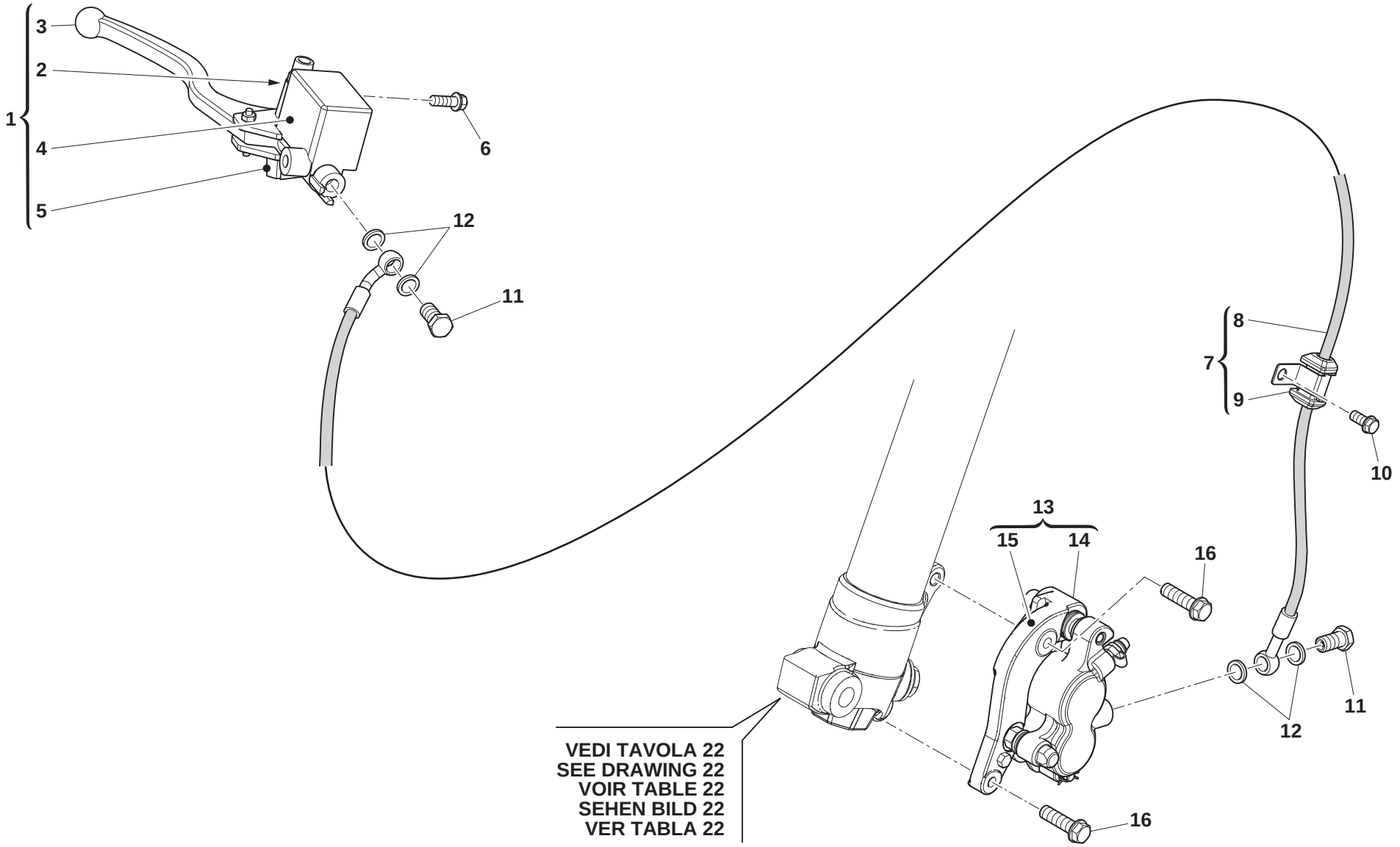
1
2
3
4
5
6
7
8
9
10
11
12
13
14
15
16
16
VEDI TAVOLA 22
SEE DRAWING 22
VOIR TABLE 22
SEHEN BILD 22
VER TABLA 22

FRENO IDRAULICO ANTERIORE - FRONT HYDRAULIC BRAKE
FREIN HYDRAULIQUE AVANT - VORDERBREMSE
FRENO HIDRAULICO DELANTERO

Note Notes Notes Marke Notas	Pos. No. N. Index Pos.	N. Cod. Code No. Nr. Code Code Nr N. Cod.	Q.tà Q.ty Q.te M.ge C.ad	DENOMINAZIONE	NAME	DESIGNATION	BESHREIBUNG	DENOMINACION
	1	55120358	1	COMANDO FRENO ANTERIORE	FRONT BRAKE CONTROL	COMMANDE FREIN	BREMSZUG	MANDO FRENO
	2	55120316	1	CAVALLOTTO	FIXED BLOCK	BOULON	BÜGELSCHRAUBE	CABALLETE
	3	45180128	1	LEVA FRENO ANTERIORE	FRONT BRAKE LEVER	LEVIER	HEBEL	PALANCA
	4	55120313	1	POMPA FRENO ANTERIORE	FRONT MASTER CYLINDER	MAÎTRE-CYLINDRE DE FREIN AVANT	HAUPTBREMSZYLINDER VORNE	BOMBA FRENO DELANTERO
	5	55120360	1	INTERRUTTORE POMPA FRENO	FRONT BRAKE PUMP SWITCH	INTERRUPTEUR DE FREIN	SCHALTER	INTERRUPTOR FRENO
	6	ZPA067545	2	VITE TEF M6x22	FLANGED EXAGON HEAD SCREW M6x22	BOULON DE BRIDE M6x22	FLANSCHENSCHRAUBE M6x22	TORNILLO DE REBORDE M6x22
	7	F000A00732	1	ASS. TUBO FRENO ANTERIORE	FRONT BRAKE TUBE ASSY	TUYAU DE FREIN AVANT COMPL.	ROHR VORDERRADBREMSE KOMPL	TUBO FRENO DELANTERO COMPL.
	8	F000P00825	1	TUBO FRENO ANTERIORE	FRONT BRAKE TUBE	TUYAU DE FREIN AVANT	ROHR VORDERRADBREMSE	TUBO FRENO DELANTERO
	9	73032259	2	FASCETTA	HOSE CLAMP	COLLIER	SCHELLE	ABRAZADERA
	10	ZH0067545	1	VITE TEF M6x12	FLANGED EXAGON HEAD SCREW M6x12	BOULON DE BRIDE M6x12	FLANSCHENSCHRAUBE M6x12	TORNILLO DE REBORDE M6x12
	11	72012149	2	VITE FORATA M10x1.25	BRAKE PIPE SCREW M10x1,25	BOULON M10x1.25	SCHRAUBE M10x1.25	TORNILLO M10x1.25
	12	800021480	4	ROSETTA Ø14x10,2x1	WASHER Ø14x10,2x1	RONDELLE Ø14x10,2x1	UNTERLEGSCHEIBE Ø14x10,2x1	ARANDELA Ø14x10,2x1
	13	55120356	1	PINZA FRENO COMPLETA	COMPLETE BRAKE CALLIPER	ETRIER DE FREIN COMPLET	BREMSSATTEL KOMPLETT	PINZA FRENO COMPLETA
	14	55120357	1	PINZA FRENO ANTERIORE	FRONT BRAKE CALLIPER	ETRIER DE FREIN AVANT	BREMSSATTEL VORDERR	PINZA FRENO DELANTERO
	15	55090061	2	COPPIA PASTIGLIE	PAIR OF BRAKE PADS	PAIRE PLAQUETTES	PAAR BREMSBELÄGE	PAREJA PASTILLAS
	16	ZL0069056	2	VITE TEF M8x33	FLANGED EXAGON HEAD SCREW M8x33	BOULON DE BRIDE M8x33	FLANSCHENSCHRAUBE M8x33	TORNILLO DE REBORDE M8x33

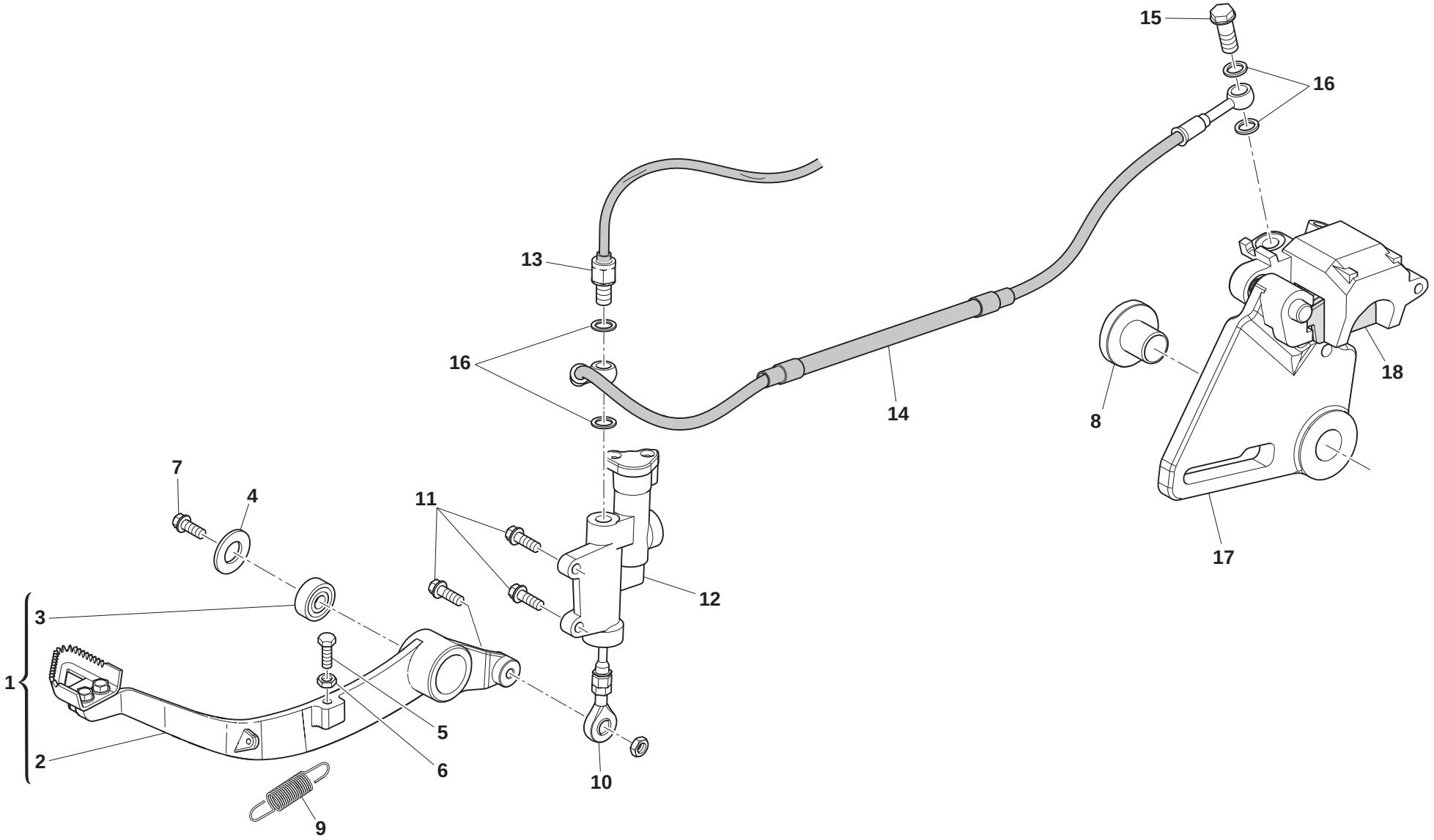
15
16
13
16
14
8
18
17
7
4
11
12
3
1
5
6
2
10
9

FRENO IDRAULICO POSTERIORE - REAR HYDRAULIC BRAKE
FREIN HYDRAULIQUE ARRIERE - HINTERBREMSE
FRENO HIDRAULICO TRASERO

Note Notes Notes Marke Notas	Pos. No. N. Index Pos.	N. Cod. Code No. Nr. Code Code Nr N. Cod.	Q.tà Q.ty Q.te M.ge C.ad	DENOMINAZIONE	NAME	DESIGNATION	BESHREIBUNG	DENOMINACION
	1	F000A00511	1	PEDALE COMANDO FRENO	BRAKE CONTROL PEDAL	PÉDALE COMMANDE DE FREIN	BREMSPEDAL	PEDAL MANDO FRENO
	2	F000P00512	1	LEVA	LEVER	LEVIER	HEBEL	PALANCA
	3	70090216	2	CUSCINETTO	BEARING	ROULEMENT	LAGER	COJINETE
	4	Z00045499	1	ROSETTA Ø15x6,25x2	WASHER Ø15x6,25x2	RONDELLE Ø15x6,25x2	UNTERLEGSCHEIBE Ø15x6,25x2	ARANDELA Ø15x6,25x2
	5	60ND01053	1	VITE TE M5x20	HEXAGON SOCKET-HEAD BOLT M5x20	VIS M5x20	SCHRAUBE M5x20	TORNILLO M5x20
	6	61ND15032	1	DADO M5	NUT M5	ECROU M5	MUTTER M5	TUERCA M5
	7	ZH0067545	1	VITE TEF M6x12	FLANGED EXAGON HEAD SCREW M6x12	BOULON DE BRIDE M6x12	FLANSCHENSCHRAUBE M6x12	TORNILLO DE REBORDE M6x12
	8	F000P00701	1	DISTANZIALE	SPACER	ENTRETOISE	ABSTANDHALTER	DISTANCIADOR
	9	F000P00834	1	MOLLA PEDALE FRENO	RETURN SPRING	RESSORT	FEDER	MUELLE
	10	55120292	1	PUNTALE	PUSH ROD	EMBOUT	STIFT	PUNTA
	11	Z00062728	3	VITE TEF M6x20	FLANGED EXAGON HEAD SCREW M6x20	BOULON DE BRIDE M6x20	FLANSCHENSCHRAUBE M6x20	TORNILLO DE REBORDE M6x20
	12	55120355	1	POMPA FRENO POSTERIORE	REAR BRAKE PUMP	MAÎTRE-CYLINDRE DE FREIN	ZUSAMMENBAU HAUPTBREMSZYLINDER	CONJUNTO BOMBA FRENO
	13	31240061	1	INTERRUTORE FRENO POSTERIORE	REAR BRAKE SWITCH	INTERRUPTEUR DE FREIN	SCHALTER	INTERRUPTOR FRENO
	14	F000A00650	1	TUBO FRENO POSTERIORE	REAR BRAKE TUBE	TUYAU DE FREIN ARRIÈRE	ROHR HINTERRADBREMSE	TUBO FRENO TRASERO
	15	72012148	1	VITE FORATA M10x1.25	BRAKE PIPE SCREW M10x1,25	VIS DE FREIN M10x1.25	SCHRAUBE M10x1.25	TORNILLO FRENO M10x1.25
	16	800021480	4	ROSETTA Ø14x10,2x1	WASHER Ø14x10,2x1	RONDELLE Ø14x10,2x1	UNTERLEGSCHEIBE Ø14x10,2x1	ARANDELA Ø14x10,2x1
	17	F000A00455	1	PINZA FRENO COMPLETA	COMPLETE BRAKE CALLIPER	ETRIER DE FREIN COMPLET	BREMSSATTEL KOMPLETT	PINZA FRENO COMPLETA
	18	55110053	1	COPPIA PASTIGLIE	PAIR OF BRAKE PADS	PAIRE PLAQUETTES	PAAR BREMSBELÄGE	PAREJA PASTILLAS

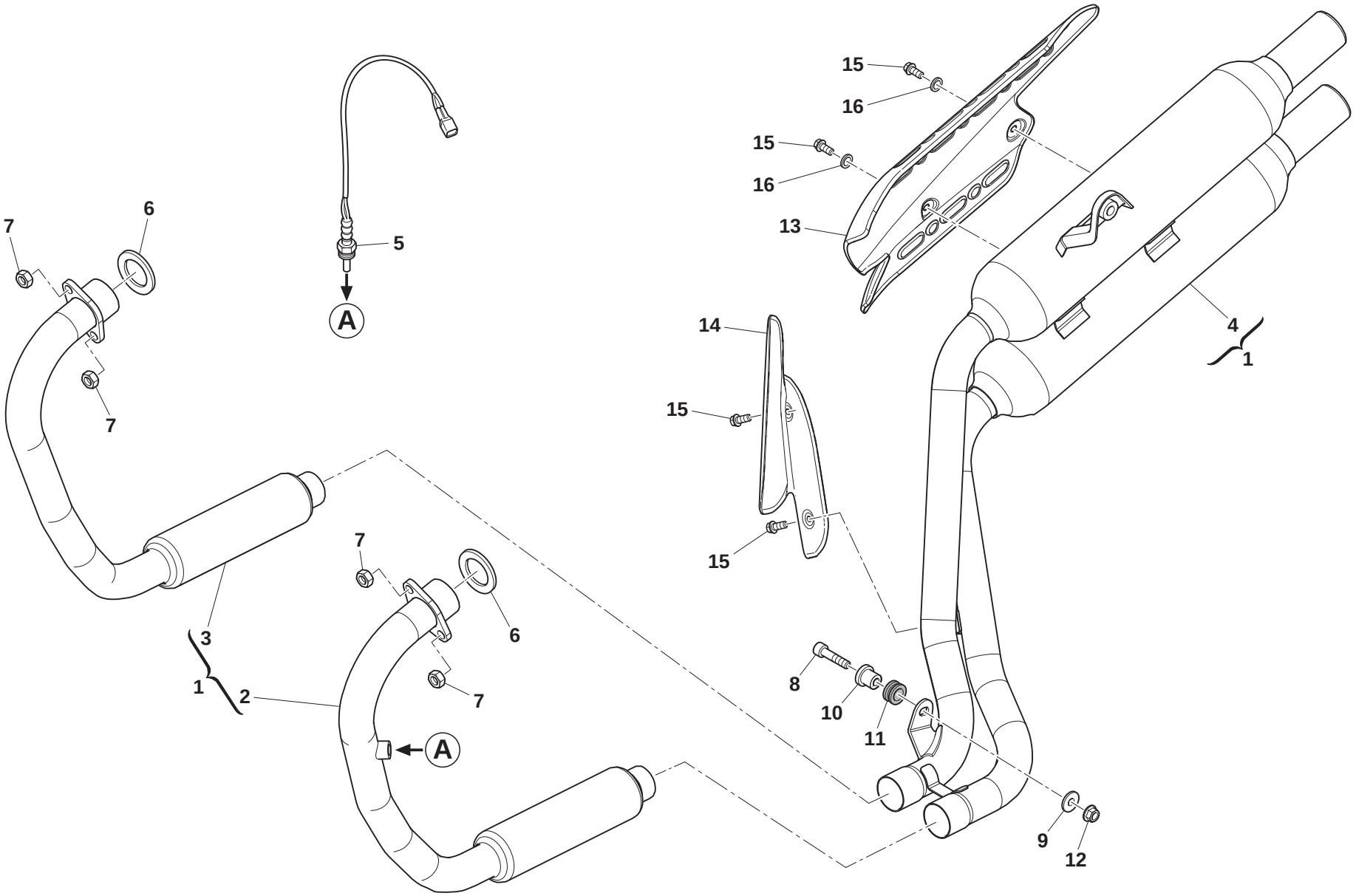
15
16
15
16
13
14
15
15
7
6
7
5
A
7
6
3
1
2
7
7
A
8
10
11
4
1
9
12

SCARICO - EXHAUST SYSTEM
TUYAU D'ECHAPPEMENT - AUSPUFFROHR
TUBO DE ESCAPE

TAVOLA DRAWING TABLE BILD TABLA **28**

Note Notes Notes Marke Notas	Pos. No. N. Index Pos.	N. Cod. Code No. Nr. Code Code Nr N. Cod.	Q.tà Q.ty Q.te M.ge C.ad	DENOMINAZIONE	NAME	DESIGNATION	BESHREIBUNG	DENOMINACION
	1	F000A00457	1	ASS. IMPIANTO DI SCARICO	EXHAUST SYSTEM ASSY	INSTALLATION DE ECHAPPEMENT	AUSPUFFROHR KOMPLETT	EQUIPO DE ESCAPE
	2	F000A00679	1	COLLETTORE DI SCARICO SINISTRO	LEFT EXHAUST MUFFLER	COLLECTEUR GAUCHE	KRÜMMER LINKE	COLECTOR IZQ.
	3	F000A00680	1	COLLETTORE DI SCARICO DESTRO	RIGHT EXHAUST MUFFLER	COLLECTEUR DROITE	KRÜMMER RECHTS	COLECTOR DER.
	4	F000A00681	1	SILENZIATORE	SILENCER	SILENCIEUX	SCHALLDÄMPFER	SILENCIADOR
	5	F000P00856	1	SONDA LAMBDA	LAMBDA SENSOR	SONDE LAMBDA	LAMBDASONDE	SONDA LAMBDA
	6	18140216	2	GUARNIZIONE SCARICO	SEAL RING, MUFFLER	JOINT	DICHTUNG	JUNTA
	7	72020492	4	DADO M8	NUT M8	ECROU M8	MUTTER M8	TUERCA M8
	8	60ND02558	1	VITE TCEI M8x35	SCREW TCEI M8x35	VIS TCEI M8x35	SCHRAUBE TCEI M8x35	TORNILLO TCEI M8x35
	9	62ND15506	1	ROSETTA	WASHER	RONDELLE	UNTERLEGSCHEIBE	ARANDELA
	10	72040549	1	DISTANZIALE	SPACER	ENTRETOISE	ABSTANDHALTER	DISTANCIADOR
	11	73012323	1	GOMMINO	RUBBER RING	JOINT EN CAOUTCHOUC	GUMMISCHEIBE	GOMA
	12	Y00043928	1	DADO FRENATO M8	SELF-LOCKING NUT M8	ECROU AUTOBLOQUANT M8	SELBSTSICHERNDE MUTTER M8	TUERCA AUTOBLOCANTE M8
	13	F000P00286	1	PROTEZIONE CALORE	SILENCER HEAT-PROTECTING	PROTECTION CHALEUR	HITZESCHUTZ	PROTECCIÓN CALOR
	14	F000P00637	1	PROTEZIONE CALORE INF.	LOWER HEAT-PROTECTING	PROTECTION CHALEUR INF.	HITZESCHUTZ UNTEN	PROTECCIÓN CALOR INF.
	15	Z00062725	4	VITE TEF M6x10	SCREW M6x10	BOULON DE BRIDE M6x10	FLANSCHENSCHRAUBE M6x10	TORNILLO DE REBORDE M6x10
	16	800035112	2	ROSETTA Ø18x6x1,5	WASHER Ø18x6x1,5	RONDELLE Ø18x6x1,5	UNTERLEGSCHEIBE Ø18x6x1,5	ARANDELA Ø18x6x1,5

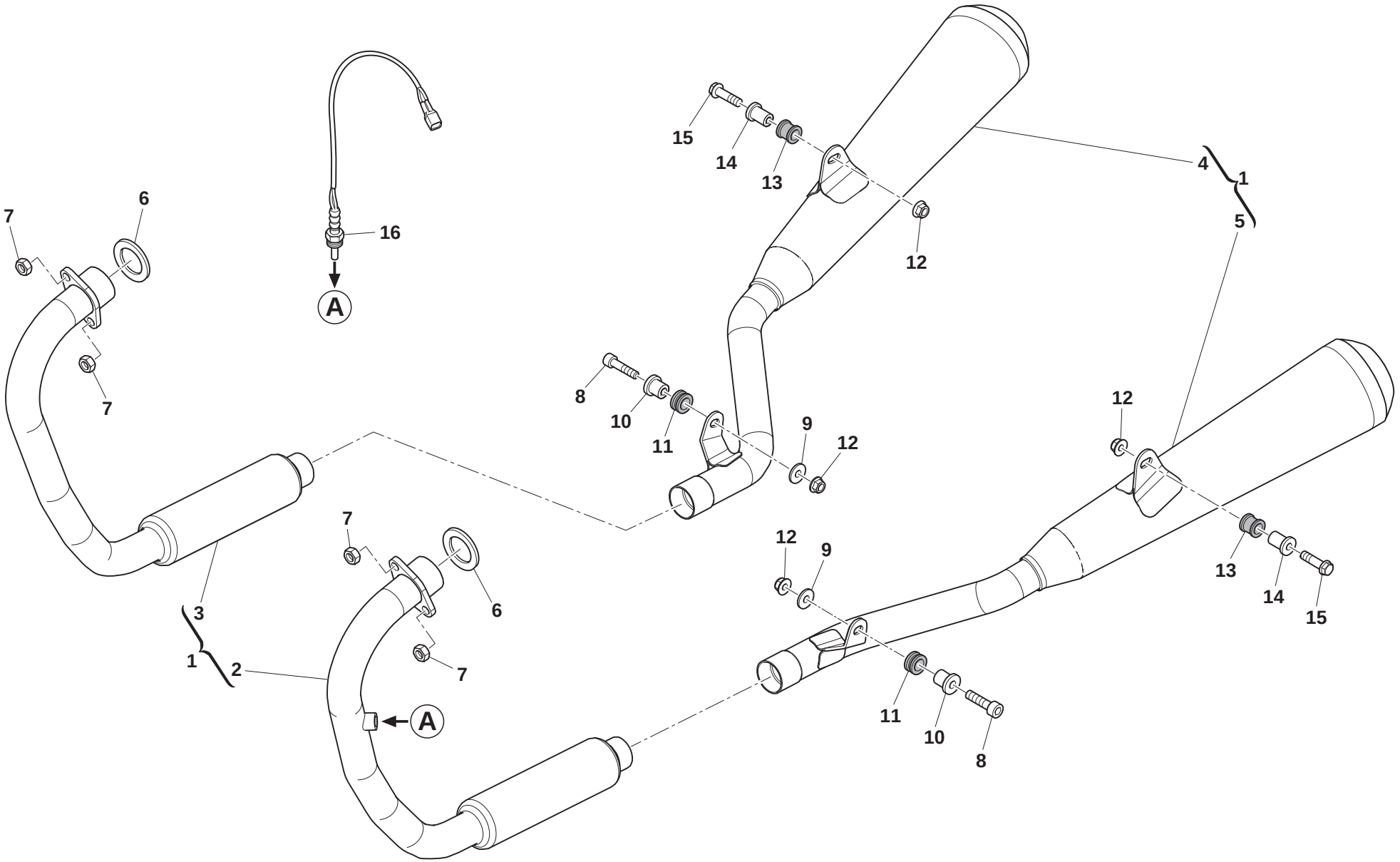
15
14
13
4
1
5
12
16
A
7
6
7
8
10
11
9
12
12
12
9
13
14
15
7
6
3
1
2
7
A
11
10
8

SCARICO - EXHAUST SYSTEM
TUYAU D'ECHAPPEMENT - AUSPUFFROHR
TUBO DE ESCAPE

TAVOLA DRAWING TABLE BILD TABLA **28A**

Note Notes Notes Marke Notas	Pos. No. N. Index Pos.	N. Cod. Code No. Nr. Code Code Nr N. Cod.	Q.tà Q.ty Q.te M.ge C.ad	DENOMINAZIONE	NAME	DESIGNATION	BESHREIBUNG	DENOMINACION
	1	F000A01089	1	ASS. IMPIANTO DI SCARICO	EXHAUST SYSTEM ASSY	INSTALLATION DE ECHAPPEMENT	AUSPUFFROHR KOMPLETT	EQUIPO DE ESCAPE
	2	F000A00679	1	COLLETTORE DI SCARICO SINISTRO	LEFT EXHAUST MUFFLER	COLLECTEUR GAUCHE	KRÜMMER LINKE	COLECTOR IZQ.
	3	F000A00680	1	COLLETTORE DI SCARICO DESTRO	RIGHT EXHAUST MUFFLER	COLLECTEUR DROITE	KRÜMMER RECHTS	COLECTOR DER.
	4	F000A00975	1	SILENZIATORE DESTRO	RIGHT SILENCER	SILENCIEUX DROITE	SCHALLDÄMPFER RECHTS	SILENCIADOR DER.
	5	F000A00976	1	SILENZIATORE SINISTRO	LEFT SILENCER	SILENCIEUX GAUCHE	SCHALLDÄMPFER LINKE	SILENCIADOR IZQ.
	6	18140216	2	GUARNIZIONE SCARICO	SEAL RING, MUFFLER	JOINT	DICHTUNG	JUNTA
	7	72020492	4	DADO M8	NUT M8	ECROU M8	MUTTER M8	TUERCA M8
	8	60ND02558	2	VITE TCEI M8x35	SCREW TCEI M8x35	VIS TCEI M8x35	SCHRAUBE TCEI M8x35	TORNILLO TCEI M8x35
	9	62ND15506	2	ROSETTA	WASHER	RONDELLE	UNTERLEGSCHEIBE	ARANDELA
	10	72040549	2	DISTANZIALE	SPACER	ENTRETOISE	ABSTANDHALTER	DISTANCIADOR
	11	73012323	2	GOMMINO	RUBBER RING	JOINT EN CAOUTCHOUC	GUMMISCHEIBE	GOMA
	12	Y00043928	4	DADO FRENATO M8	SELF-LOCKING NUT M8	ECROU AUTOBLOQUANT M8	SELBSTSICHERNDE MUTTER M8	TUERCA AUTOBLOCANTE M8
	13	72040550	2	DISTANZIALE CON COLLETTO	SPACER	ENTRETOISE	ABSTANDHALTER	DISTANCIADOR
	14	73012157	2	SILENT-BLOCK	SILENT-BLOCK	SILENT-BLOCK	SILENT-BLOCK	SILENT-BLOCK
	15	ZA0069056	2	VITE TEF M8x45	SCREW M8x45	BOULON DE BRIDE M8x45	FLANSCHENSCHRAUBE M8x45	TORNILLO DE REBORDE M8x45
	16	F000P00856	1	SONDA LAMBDA	LAMBDA SENSOR	SONDE LAMBDA	LAMBDASONDE	SONDA LAMBDA

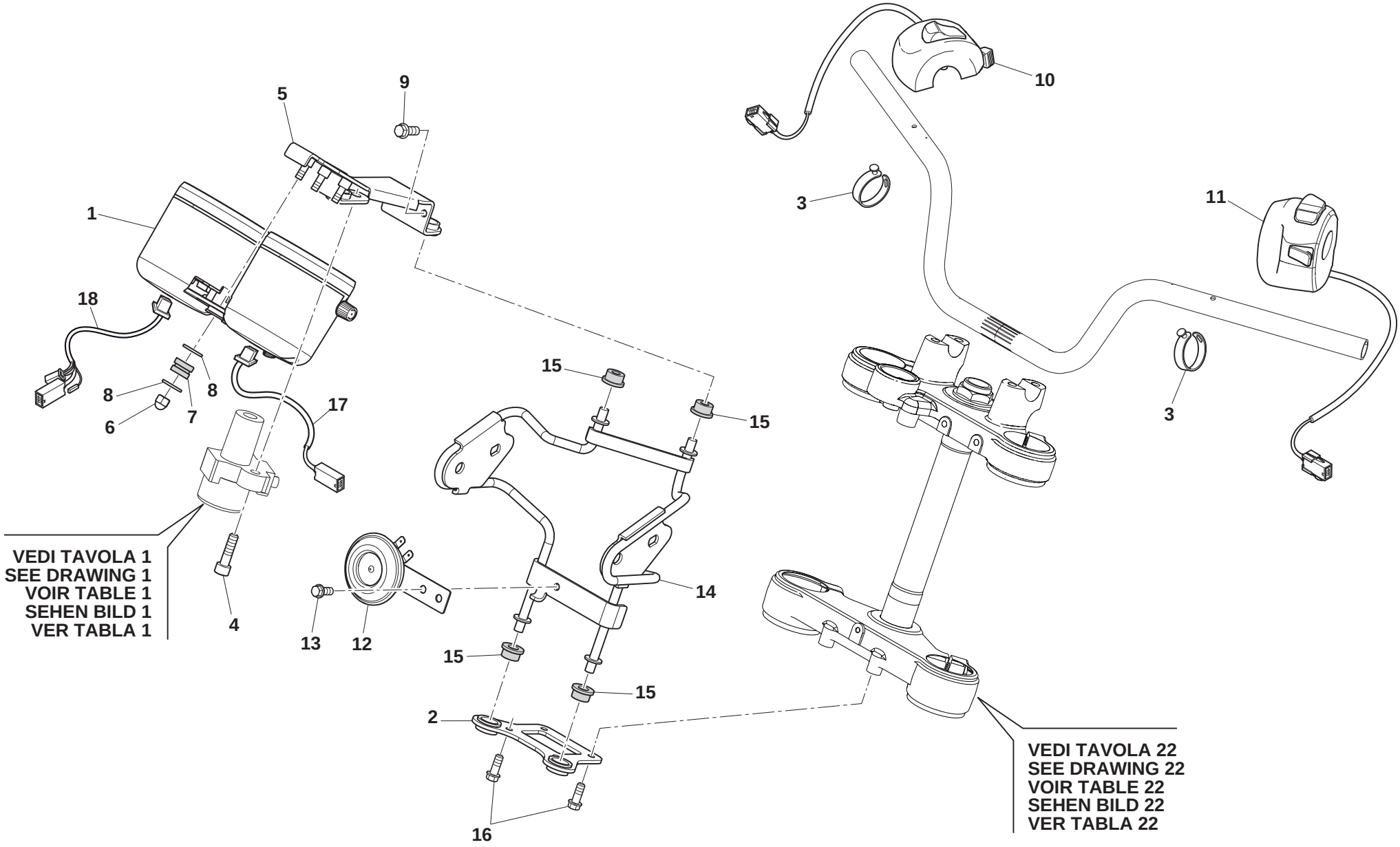
1
2
3
4
5
6
7
8
8
9
10
11
12
13
14
15
15
15
15
16
17
18
VEDI TAVOLA 1
SEE DRAWING 1
VOIR TABLE 1
SEHEN BILD 1
VER TABLA 1
VEDI TAVOLA 22
SEE DRAWING 22
VOIR TABLE 22
SEHEN BILD 22
VER TABLA 22

STRUMENTO DIGITALE - DIGITAL INSTRUMENT
INSTRUMENT DIGITAL - DIGITAL TACHOMETER
INSTRUMENTO DIGITAI

Note Notes Notes Marke Notas	Pos. No. N. Index Pos.	N. Cod. Code No. Nr. Code Code Nr N. Cod.	Q.tà Q.ty Q.te M.ge C.ad	DENOMINAZIONE	NAME	DESIGNATION	BESHREIBUNG	DENOMINACION
	1	FA00A00545	1	ASSIEME STRUMENTO	INSTRUMENT ASSY	INSTRUMENT ENSEMBLE	ZUSAMMENBAU INSTRUMENT	CONJUNTO INSTRUMENTO
	2	F000P00471	1	STAFFA FARO INFERIORE	BRACKET	ETRIER	BÜGEL	ESTRIBO
	3	800092668	5	FASCETTA IN GOMMA L=25 mm	RUBBER CLAMP L=25 mm	COLLIER EN CAOUTCHOUC L=25 mm	GUMMISCHELLE L=25 mm	ABRAZADERA DE GOMA L=25 mm
	4	60ND02555	2	VITE TCEI M8x20	SCREW TCEI M8x20	VIS TCEI M8x20	SCHRAUBE TCEI M8x20	TORNILLO TCEI M8x20
	5	F000P00459	1	STAFFA	BRACKET	ETRIER	BÜGEL	ESTRIBO
	6	72020507	3	DADO M6	NUT M6	ECROU M6	MUTTER M6	TUERCA M6
	7	73012155	3	GOMMINO ANTIVIBRANTE	SILENT-BLOCK	ANTIVIBRATION	SCHWINGUNGSDAMFER	ANTIVIBRADOR
	8	Z00021535	6	ROSETTA Ø18x6x1,5	WASHER Ø18x6x1,5	RONDELLE Ø18x6x1,5	UNTERLEGSCHEIBE Ø18x6x1,5	ARANDELA Ø18x6x1,5
	9	Z00062727	2	VITE TEF M6x16	FLANGED EXAGON HEAD SCREW M6x16	BOULON DE BRIDE M6x16	FLANSCHENSCHRAUBE M6x16	TORNILLO DE REBORDE M6x16
	10	F000P00837	1	COMMUTATORE DESTRO	RIGHT HANDLE SWITCH	COMMUTATEUR DROITE	UMSCHALTER RECHTS	CONMUTADOR DERECHO
	11	36020246	1	COMMUTATORE SINISTRO	LEFT HANDLE SWITCH	COMMUTATEUR GAUCHE	UMSCHALTER LINKS	CONMUTADOR IZQUIERDO
	12	31080131	1	AVVISATORE ACUSTICO	HORN ASSY	AVERTISSEUR SONORE	HUPE	AVISADOR ACÚSTICO
	13	ZH0067545	1	VITE TEF M6x12	FLANGED EXAGON HEAD SCREW M6x12	BOULON DE BRIDE M6x12	FLANSCHENSCHRAUBE M6x12	TORNILLO DE REBORDE M6x12
	14	F000P00486	1	TELAIETTO DI SOSTEGNO	HEAD LIGHT FRAME	SOUS-CHÂSSIS DE SUPPORT	STÜTZRAHMEN	SUBCHASIS DE SUJECIÓN
	15	73012327	4	GOMMINO	RUBBER RING	JOINT EN CAOUTCHOUC	GUMMISCHEIBE	GOMA
	16	Z00062726	4	VITE TEF M6x14	FLANGED EXAGON HEAD SCREW M6x14	BOULON DE BRIDE M6x14	FLANSCHENSCHRAUBE M6x14	TORNILLO DE REBORDE M6x14
	17	E000P01412	1	CAVO PER CONTACHILOMETRI	ODOMETER CABLE	CÂBLE POUR COMPTEUR KILOMÉTRIQUE	KABEL FÜR ODOMETER	CABLE DEL CUENTAKILÓMETROS
	18	E000P01413	1	CAVO PER CONTAGIRI	REV COUNTER CABLE	CÂBLE POUR COMPTE-TOURS	KABEL FÜR DREHZAHLMESSER	CABLE DEL CUENTAVUELTAS

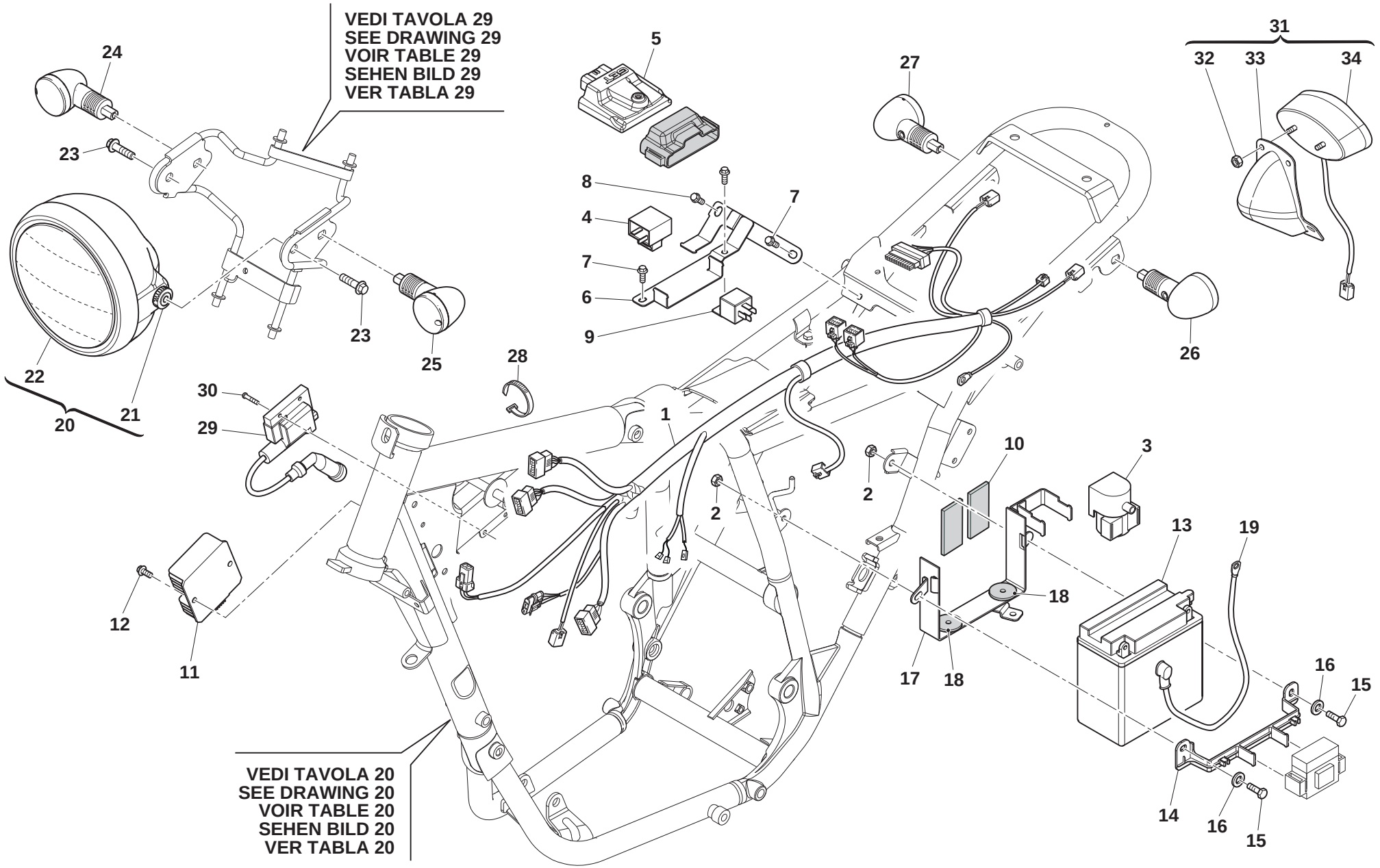
VEDI TAVOLA 29
SEE DRAWING 29
VOIR TABLE 29
SEHEN BILD 29
VER TABLA 29
VEDI TAVOLA 20
SEE DRAWING 20
VOIR TABLE 20
SEHEN BILD 20
VER TABLA 20
1
2
2
3
4
5
6
7
7
8
9
10
11
12
13
14
15
15
16
16
17
18
18
19
20
21
22
23
23
24
25
26
27
28
29
30
31
32
33
34

GRUPPO CAVI, PARTI ELETTRICHE - MAIN WIRING HARNESS, ELECTRICAL PARTS
CABLES PRINCIPAL, PARTIES ELECTRIQUES - KABEL, ELEKTRISCHE KOMPONENTE
GRUPO PRINCIPAL CABLES, PARTES ELECTRICAS

Note Notes Notes Marke Notas	Pos. No. N. Index Pos.	N. Cod. Code No. Nr. Code Code Nr N. Cod.	Q.tà Q.ty Q.te M.ge C.ad	DENOMINAZIONE	NAME	DESIGNATION	BESHREIBUNG	DENOMINACION
	1	F000E00658	1	CABLAGGIO PRINCIPALE	MAIN CABLE HARNESS	CÂBLAGE PRINCIPAL	HAUPTVERKABELUNG	CABLEADO PRINCIPAL
	2	72030698	2	VITE M4x20	SCREW M4x20	VIS M4x20	SCHRAUBE M4x20	TORNILLO M4x20
	3	31050077	1	RELE AVVIAMENTO	STARTER RELAY	RELAIS DE DEMARRAGE	STARTER RELAIS	RELÉ DE ARRANQUE
	4	31040019	1	INTERMITTENZA	FLASHER	DISPOSITIF CLIGNOTANTS	BLINKGEBER	INTERMITENCIA
SILVER VASE	5	E000P00813	1	CENTRALINA ELETTRONICA	ELECTRONIC CONTROL UNIT	BOÎTIER ÉLECTRONIQUE	STEUERELEKTRONIK	CENTRALITA ELECTRÓNICA
GRAN TURISMO	5	E000P01079	1	CENTRALINA ELETTRONICA	ELECTRONIC CONTROL UNIT	BOÎTIER ÉLECTRONIQUE	STEUERELEKTRONIK	CENTRALITA ELECTRÓNICA
	6	F000P00778	1	STAFFA FISSAGGIO ECU	BRACKET	ETRIER	BÜGEL	ESTRIBO
	7	Z00062726	1	VITE TEF M6x14	FLANGED EXAGON HEAD SCREW M6x14	BOULON DE BRIDE M6x14	FLANSCHENSCHRAUBE M6x14	TORNILLO DE REBORDE M6x14
	8	ZA0067997	1	VITE TEF M5x16	FLANGED EXAGON HEAD SCREW M5x16	BOULON DE BRIDE M5x16	FLANSCHENSCHRAUBE M5x16	TORNILLO DE REBORDE M5x16
	9	31190006	1	RELE POMPA BENZINA	RELAY FUEL PUMP	RELAIS POMPE À CARBURANT	BENZINPUMPE RELAIS	RELÉ BOMBA GASOLINA
	10	73012420	2	SPUGNA ADESIVA	SINGLE-SIDED ADHESIVE	ADHÉSIF EPONGE	KLEBEGUMMI	GOMAESPUMA ADHESIVA
	11	31030087	1	REGOLATORE DI TENSIONE	VOLTAGE REGULATOR	RÉGULATEUR DE TENSION	SPANNUNGSREGLER	REGULADOR DE TENSIÓN
	12	72011991	2	VITE M6x12	BOLT M6x12	VIS M6x12	SCHRAUBE M6x12	TORNILLO M6x12
	13	31070060	1	BATTERIA	BATTERY	BATTERIE	BATTERIE	BATERÍA
	14	73021083	1	STAFFA FISSAGGIO BATTERIA	BRACKET	ETRIER	BÜGEL	ESTRIBO
	15	Z00062726	3	VITE TEF M6x14	FLANGED EXAGON HEAD SCREW M6x14	BOULON DE BRIDE M6x14	FLANSCHENSCHRAUBE M6x14	TORNILLO DE REBORDE M6x14
	16	Z00021535	2	ROSETTA Ø18x6x1,5	WASHER Ø18x6x1,5	RONDELLE Ø18x6x1,5	UNTERLEGSCHEIBE Ø18x6x1,5	ARANDELA Ø18x6x1,5
	17	73250179	1	SUPPORTO BATTERIA	BATTERY SUPPORT	SUPPORT BATTERIE	BATTERIE HALTERUNG	SOPORTE BATERÍA
	18	73010197	2	GOMMINO APPOGGIO BATTERIA	DAMPING MAT, BATTERY	JOINT EN CAOUTCHOUC	GUMMISCHEIBE	GOMA
	19	31350069	1	CAVO ALTA TENSIONE	HIGH VOLTAGE WIRE	CÂBLE	KABEL	CABLE
	20	32010370	1	FANALE ANTERIORE COMPLETO	COMPLETE FRONT HEADLAMP	FEU AVANT COMPLET	FRONTSCHEINWERFER KOMPLETT	FARO DELANTERO COMPLETO
	21	73012493	2	GOMMINO ANTIVIBRANTE	SILENT-BLOCK	ANTIVIBRATION	SCHWINGUNGSDAMFER	ANTIVIBRADOR
	22	32010369	1	FANALE ANTERIORE	FRONT HEADLAMP	FEU AVANT	FRONTSCHEINWERFER	FARO DELANTERO
	23	8A00B1959	2	VITE TEF M8x30	FLANGED EXAGON HEAD SCREW M8x30	BOULON DE BRIDE M8x30	FLANSCHENSCHRAUBE M8x30	TORNILLO DE REBORDE M8x30
	24	32040237	1	INDICATORE ANT. DX	RH FRONT INDICATOR	CLIGNOTANT AV. DROITE	RICHTUNGSANZEIGER VORNE RE	INTERMITENTE DEL. DER.
	25	32050950	1	INDICATORE ANT. SX	LH FRONT INDICATOR	CLIGNOTANT AV. GAUCHE	RICHTUNGSANZEIGER VORNE LI	INTERMITENTE DEL. IZQ.
	26	32020266	1	INDICATORE POST. DX	RH REAR INDICATOR	CLIGNOTANT AR. DROITE	RICHTUNGSANZEIGER HINTEN RE	INTERMITENTE TRAS. DCH.
	27	32030265	1	INDICATORE POST. SX	LH REAR INDICATOR	CLIGNOTANT AR. GAUCHE	RICHTUNGSANZEIGER HINTEN LI	INTERMITENTE TRAS. IZQ.
	28	800056444	6	FASCETTA L=188 mm	CLAMP L=188 mm	COLLIER L=188 mm	SCHELLE L=188 mm	ABRAZADERA L=188 mm
	29	31020123	1	BOBINA	COIL	BOBINE	ZÜNDSPULE	BOBINA
	30	Z00040717	2	DADO AUTOBLOCCANTE M4x0,7	SELF-LOCKING NUT M4x0,7	ECROU AUTOBLOQUANT M4x0,7	SELBSTSICHERNDE MUTTER M4x0,7	TUERCA AUTOBLOCANTE M4x0,7
	31	32060533	1	FANALE POSTERIORE COMPLETO	COMPLETE TAIL LIGHT	FEU ARRIÈRE COMPLET	HECKSCHEINWERFER KOMPLETT	PILOTO TRASERO COMPLETO
	32	72020507	2	DADO M6x1	NUT M6x1	ECROU M6x1	MUTTER M6x1	TUERCA M6x1

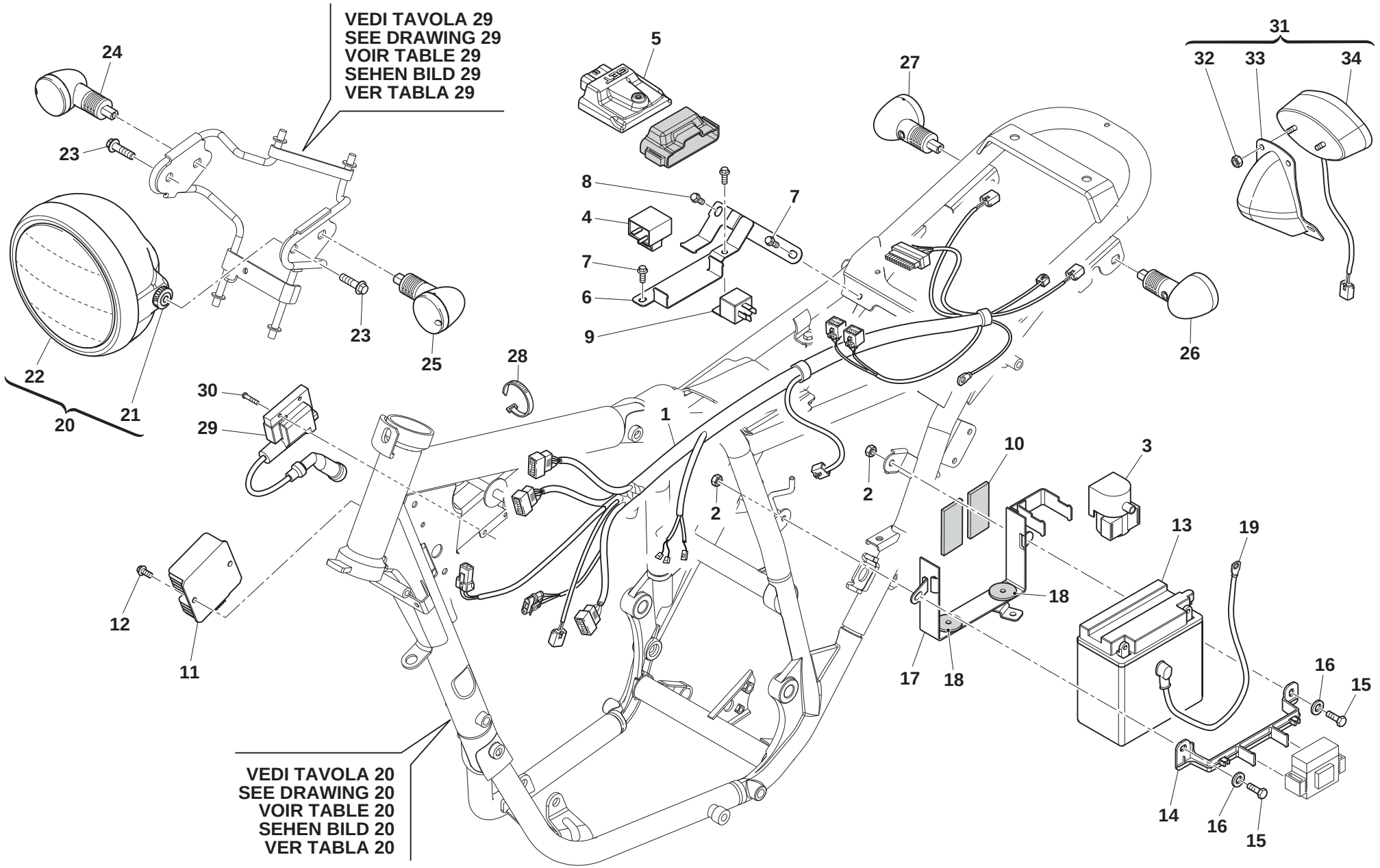
VEDI TAVOLA 29
SEE DRAWING 29
VOIR TABLE 29
SEHEN BILD 29
VER TABLA 29
VEDI TAVOLA 20
SEE DRAWING 20
VOIR TABLE 20
SEHEN BILD 20
VER TABLA 20
1
2
2
3
4
5
6
7
7
8
9
10
11
12
13
14
15
15
16
16
17
18
18
19
20
21
22
23
23
24
25
26
27
28
29
30
31
32
33
34

GRUPPO CAVI, PARTI ELETTRICHE - MAIN WIRING HARNESS, ELECTRICAL PARTS
CABLES PRINCIPAL, PARTIES ELECTRIQUES - KABEL, ELEKTRISCHE KOMPONENTE
GRUPO PRINCIPAL CABLES, PARTES ELECTRICAS

TAVOLA
DRAWING
TABLE
BILD
TABLA
30

Note Notes Notes Marke Notas	Pos. No. N. Index Pos.	N. Cod. Code No. Nr. Code Code Nr N. Cod.	Q.tà Q.ty Q.te M.ge C.ad	DENOMINAZIONE	NAME	DESIGNATION	BESHREIBUNG	DENOMINACION
	33	73220064	1	SUPPORTO FARO POSTERIORE	SUPPORT	SUPPORT	HALTERUNG	SOPORTE
	34	32060532	1	FANALE POSTERIORE	TAIL LIGHT	FEU ARRIÈRE	HECKSCHEINWERFER	PILOTO TRASERO

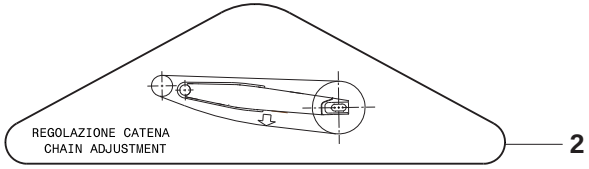

2

1

IMPORTANT INFORMATION Cold Tyre Inflation Pressure		
DRIVER ONLY	FRONT	1.8 bar. 26.1 psi
	REAR	2.0 bar. 29.0 psi
DRIVER	FRONT	2.0 bar. 29.0 psi
AND PASSENGER	REAR	2.2 bar. 31.9 psi

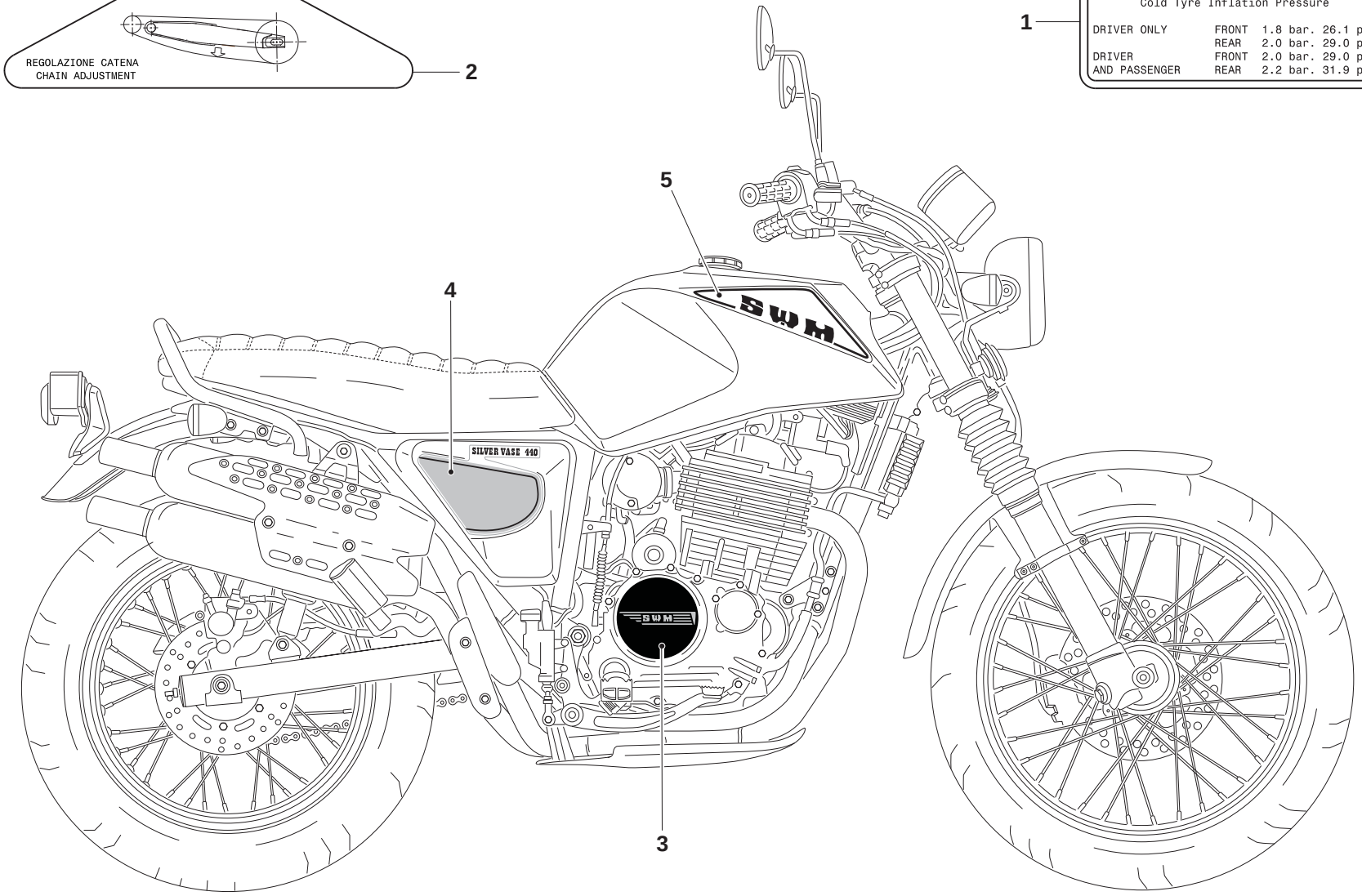

DECALCOMANIE - TRANSFER
DACALCOMANIE - ABZIEHBILD
CALCOMANIA

TAVOLA DRAWING TABLE BILD TABLA **31**

Note Notes Notes Marke Notas	Pos. No. N. Index Pos.	N. Cod. Code No. Nr. Code Code Nr N. Cod.	Q.tà Q.ty Q.te M.ge C.ad	DENOMINAZIONE	NAME	DESIGNATION	BESHREIBUNG	DENOMINACION
	1	8A0077871	1	DECALCO PRESSIONE PNEUMATICI	TYRE PRESSURE TRANSFER	AUTOCOLLANT PRESSION PNEUS	AUFKLEBER REIFENDRUCK	CALCOMANÍA PRESIÓN NEUMÁTICOS
	2	A000P01093	1	DECALCO REGOLAZIONE CATENA	CHAIN ADJUSTMENT TRANSFER	AUTOCOLLANT RÉGLAGE CHAÎNE	AUFKLEBER KETTENEINSTELLUNG	CALCOMANÍA REGULACIÓN CADENA
	3	M000P01373	1	ADESIVO COPERCHIO FRIZIONE	CLUTCH COVER STICKER	ADHÉSIF COUVERCLE	AUFKLEBERDECKEL	ADHESIVO TAPA EMBRAGUE
	4	F000P00302	1	ADESIVO DESTRO	RIGHT STICKER	ADHÉSIF DROITE	AUFKLEBER RECHTS	ADHESIVO DER.
	4	F000P00301	1	ADESIVO SINISTRO	LEFT STICKER	ADHÉSIF GAUCHE	AUFKLEBER LINKS	ADHESIVO IZQ.
	5	F000P00291	1	ADESIVO DESTRO	RIGHT STICKER	ADHÉSIF DROITE	AUFKLEBER RECHTS	ADHESIVO DER.
	5	F000P00290	1	ADESIVO SINISTRO	LEFT STICKER	ADHÉSIF GAUCHE	AUFKLEBER LINKS	ADHESIVO IZQ.

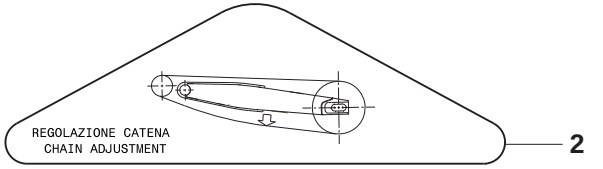

2

1

IMPORTANT INFORMATION
Cold Tyre Inflation Pressure

DRIVER ONLY	FRONT	1.8 bar. 26.1 psi
	REAR	2.0 bar. 29.0 psi
DRIVER	FRONT	2.0 bar. 29.0 psi
AND PASSENGER	REAR	2.2 bar. 31.9 psi

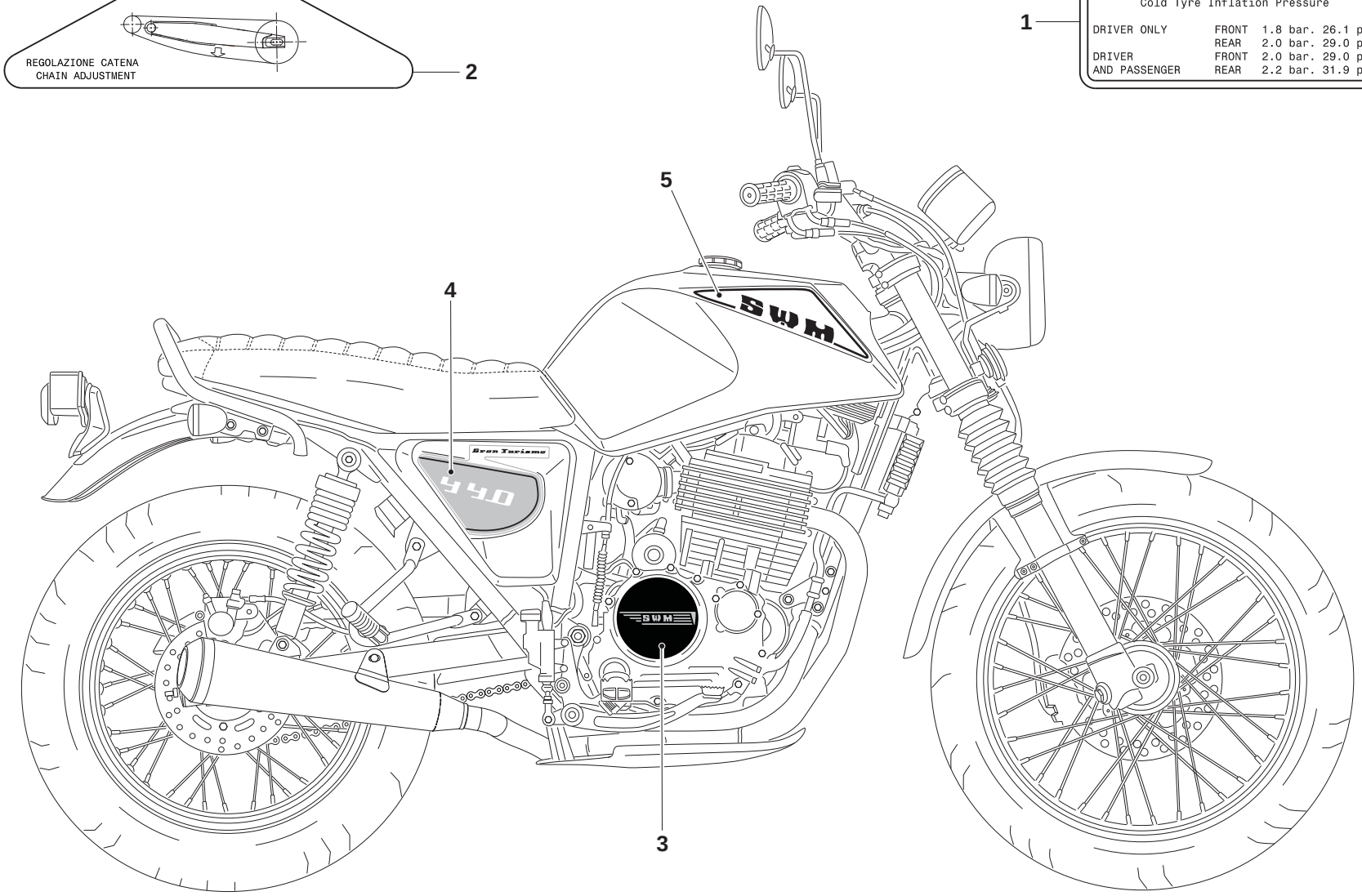

DECALCOMANIE - TRANSFER
DACALCOMANIE - ABZIEHBILD
CALCOMANIA

TAVOLA DRAWING TABLE BILD TABLA **31A**

Note Notes Notes Marke Notas	Pos. No. N. Index Pos.	N. Cod. Code No. Nr. Code Code Nr N. Cod.	Q.tà Q.ty Q.te M.ge C.ad	DENOMINAZIONE	NAME	DESIGNATION	BESHREIBUNG	DENOMINACION
	1	8B0077871	1	DECALCO PRESSIONE PNEUMATICI	TYRE PRESSURE TRANSFER	AUTOCOLLANT PRESSION PNEUS	AUFKLEBER REIFENDRUCK	CALCOMANÍA PRESIÓN NEUMÁTICOS
	2	A000P01093	1	DECALCO REGOLAZIONE CATENA	CHAIN ADJUSTMENT TRANSFER	AUTOCOLLANT RÉGLAGE CHAÎNE	AUFKLEBER KETTENEINSTELLUNG	CALCOMANÍA REGULACIÓN CADENA
	3	M000P01373	1	ADESIVO COPERCHIO FRIZIONE	CLUTCH COVER STICKER	ADHÉSIF COUVERCLE	AUFKLEBERDECKEL	ADHESIVO TAPA EMBRAGUE
	4	F000P01076	1	ADESIVO DESTRO	RIGHT STICKER	ADHÉSIF DROITE	AUFKLEBER RECHTS	ADHESIVO DER.
	4	F000P01078	1	ADESIVO SINISTRO	LEFT STICKER	ADHÉSIF GAUCHE	AUFKLEBER LINKS	ADHESIVO IZQ.
	5	F000P00291	1	ADESIVO DESTRO	RIGHT STICKER	ADHÉSIF DROITE	AUFKLEBER RECHTS	ADHESIVO DER.
	5	F000P00290	1	ADESIVO SINISTRO	LEFT STICKER	ADHÉSIF GAUCHE	AUFKLEBER LINKS	ADHESIVO IZQ.